M-Class

The Most Extreme Applications Have Met Their Match

M-CLASS

CUSTOM METAL SEATED

M-Class

NPS ½ to NPS 16 (DN 15 to DN 400)

-253ºC / -423ºF to 875ºC / 1607ºF/

Up to and above Class 4500

Most extreme applications

Different Price Options (“Valves as a Service”)

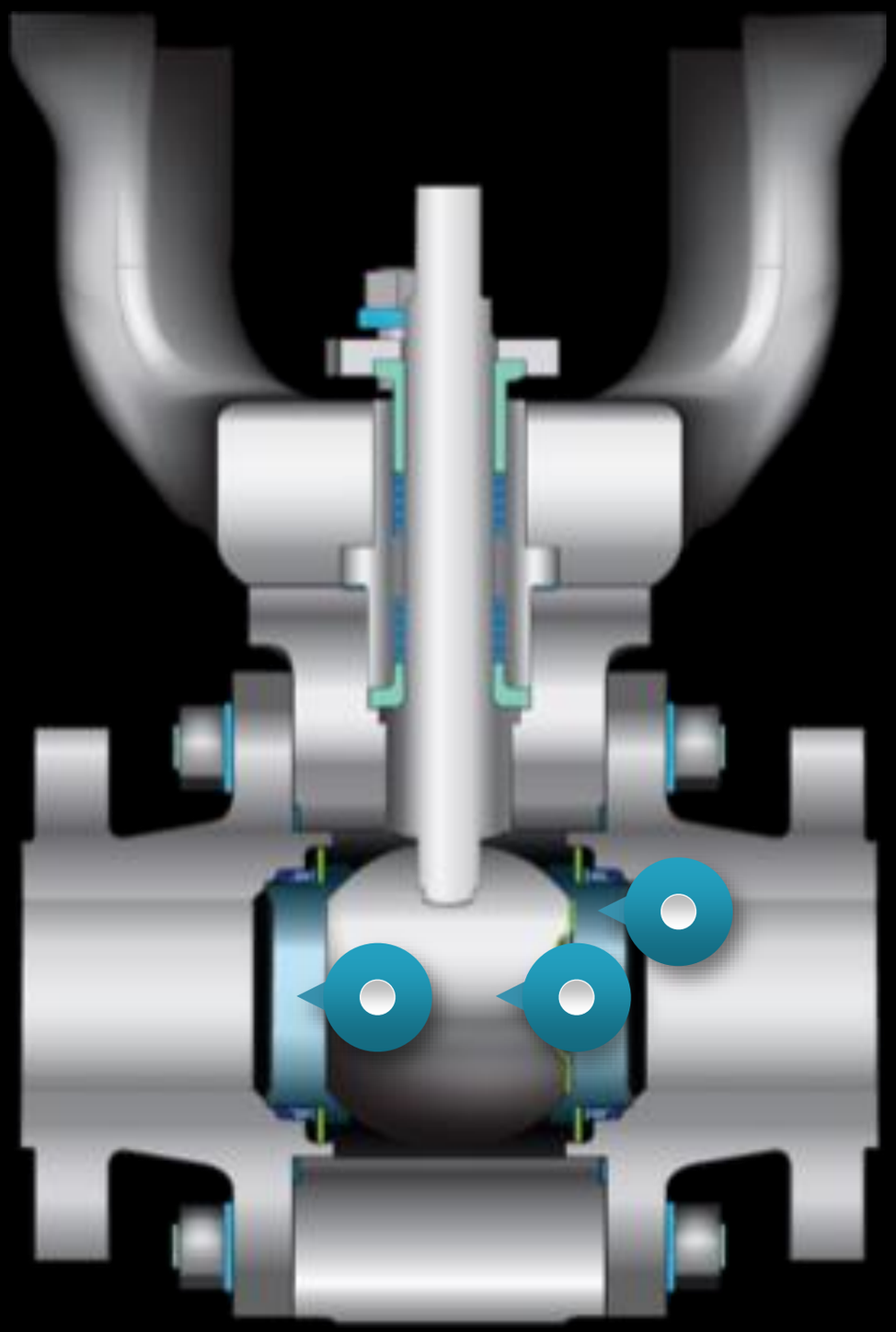

FEATURES

Superior Trim Hardening

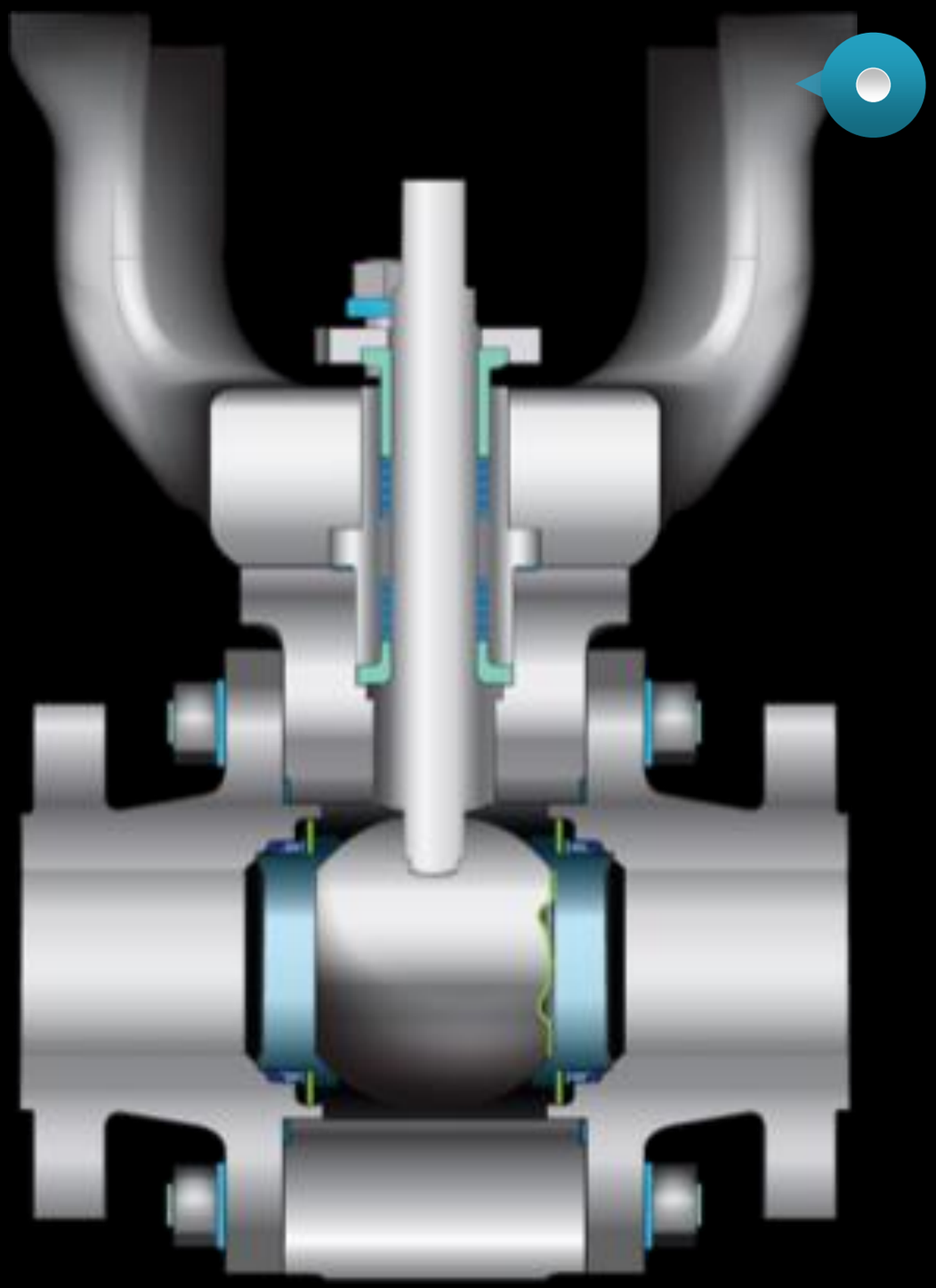

FEATURES

Superior Trim Hardening

Tripod Mounting Bracket

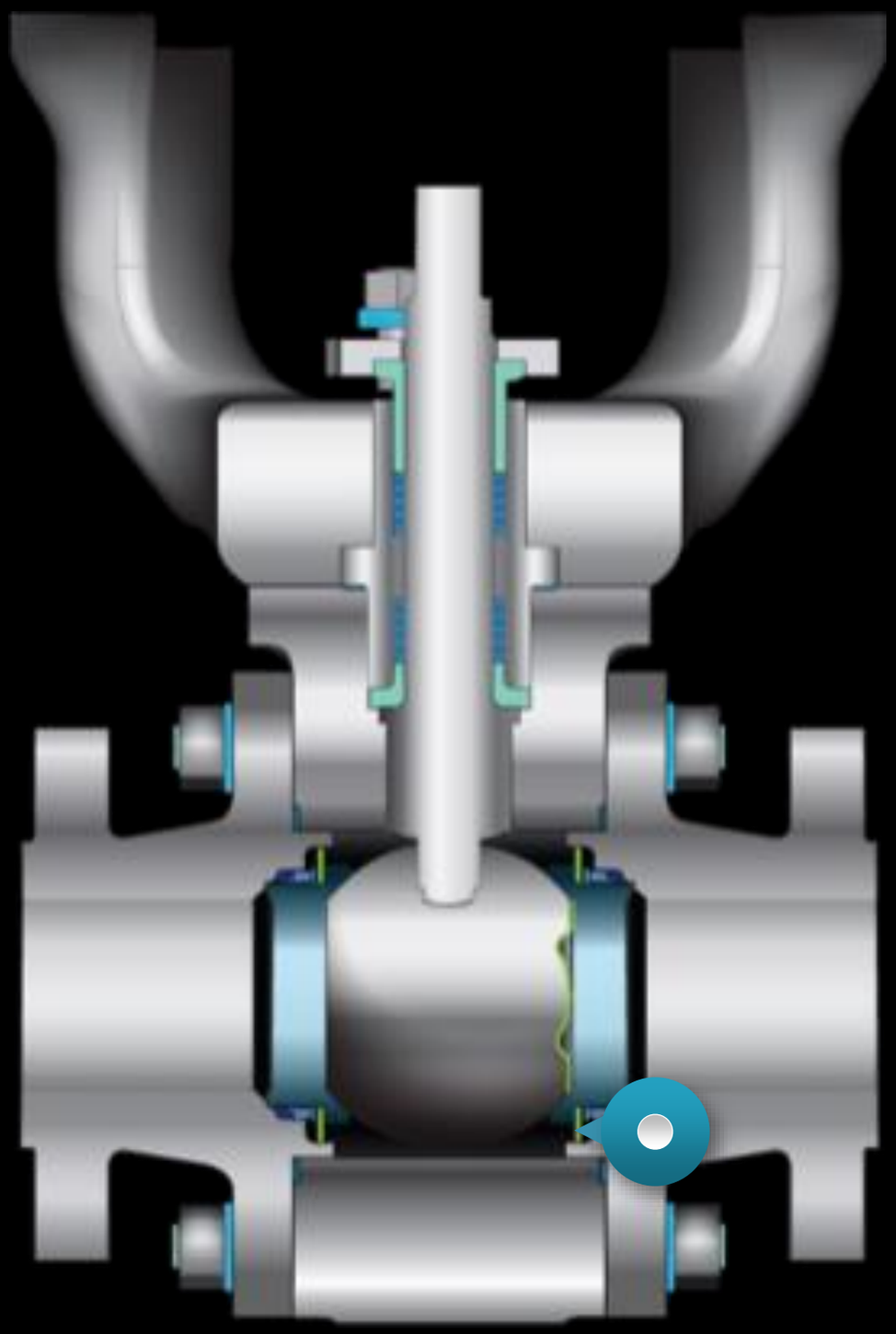

FEATURES

Superior Trim Hardening

Tripod Mounting Bracket

Seat/Spring Design

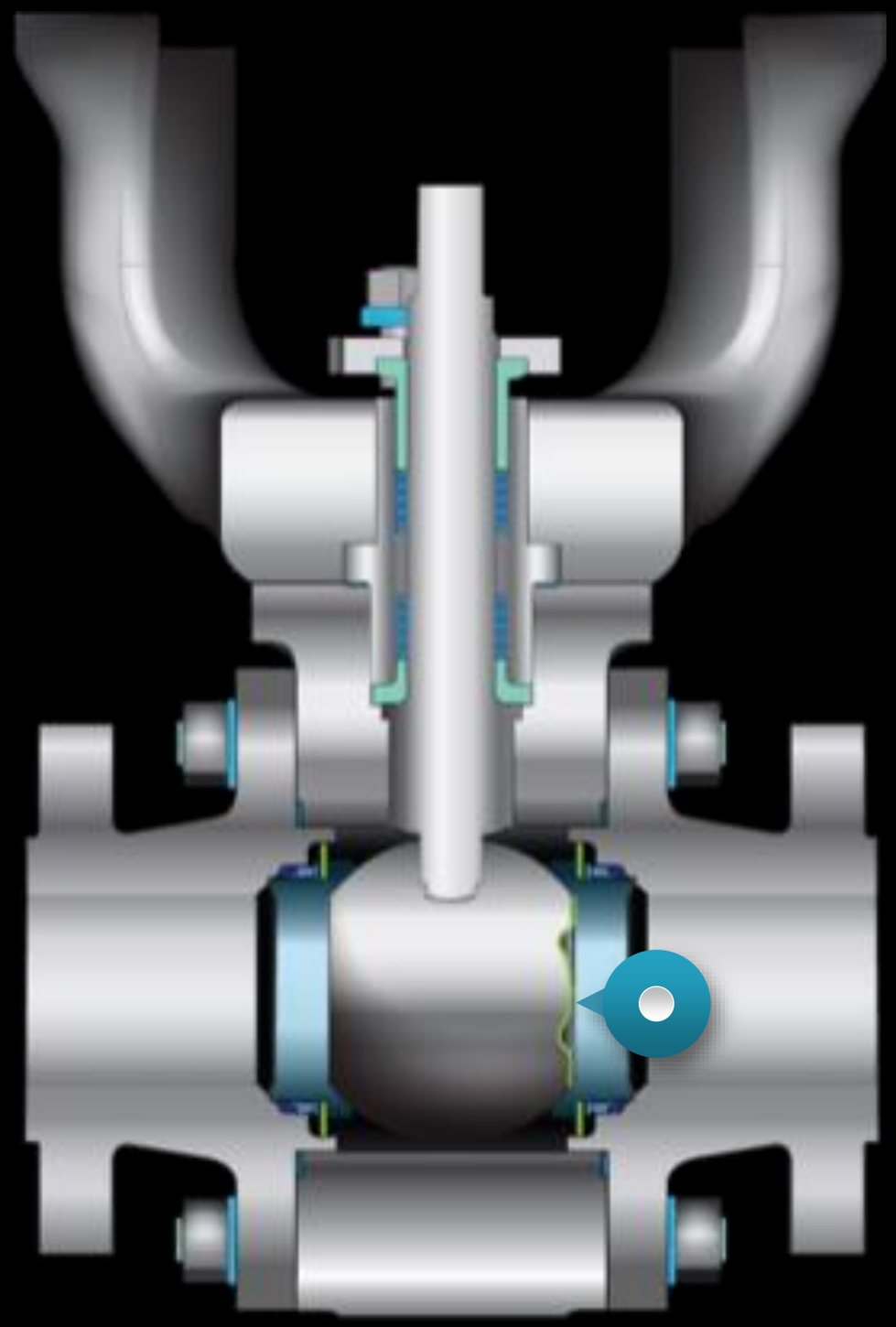

FEATURES

Superior Trim Hardening

Tripod Mounting Bracket

Seat/Spring Design

Arcuate Cut or Vari V Ball

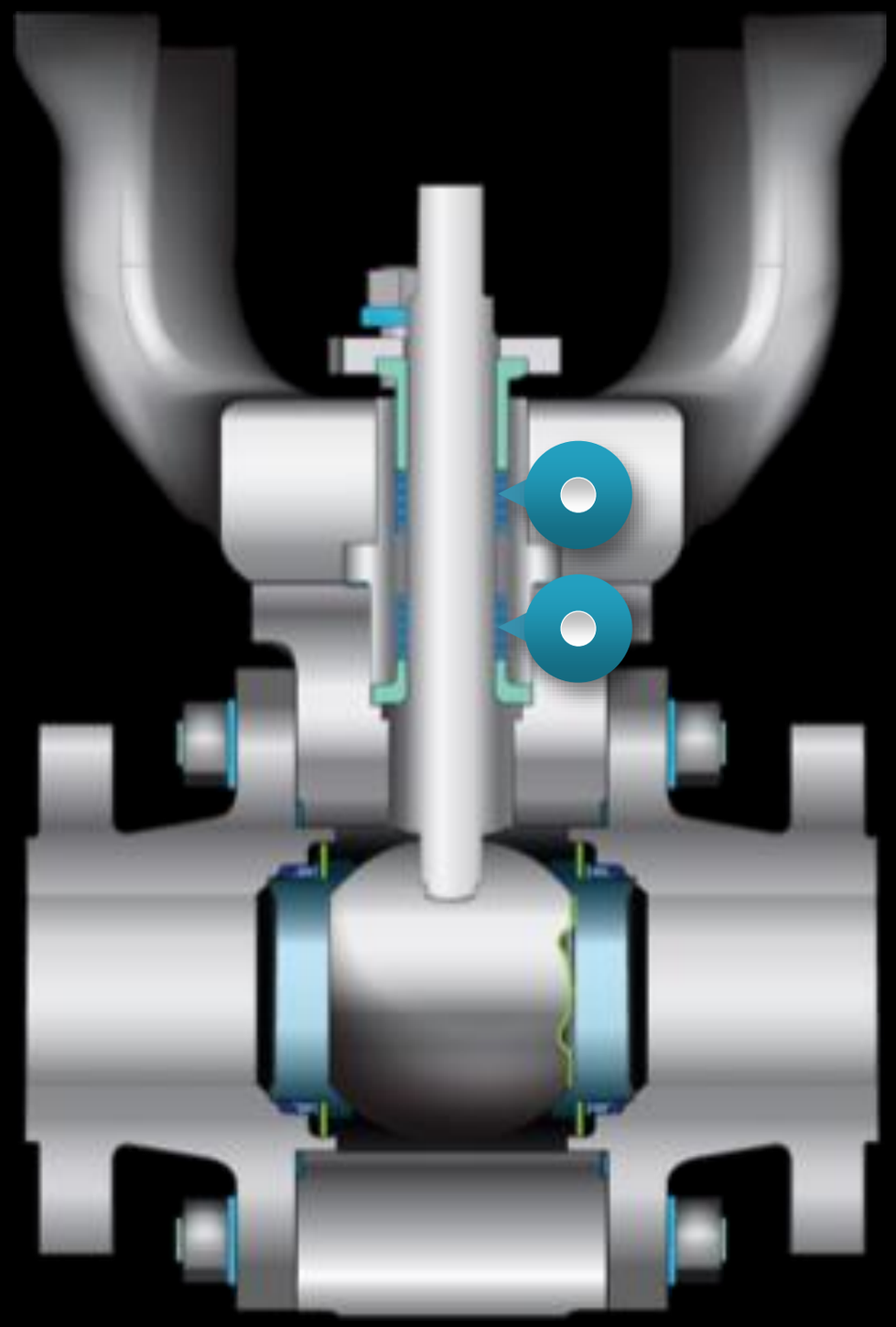

FEATURES

Superior Trim Hardening

Tripod Mounting Bracket

Seat/Spring Design

Arcuate Cut or Vari V Ball

Dual Shaft Packing

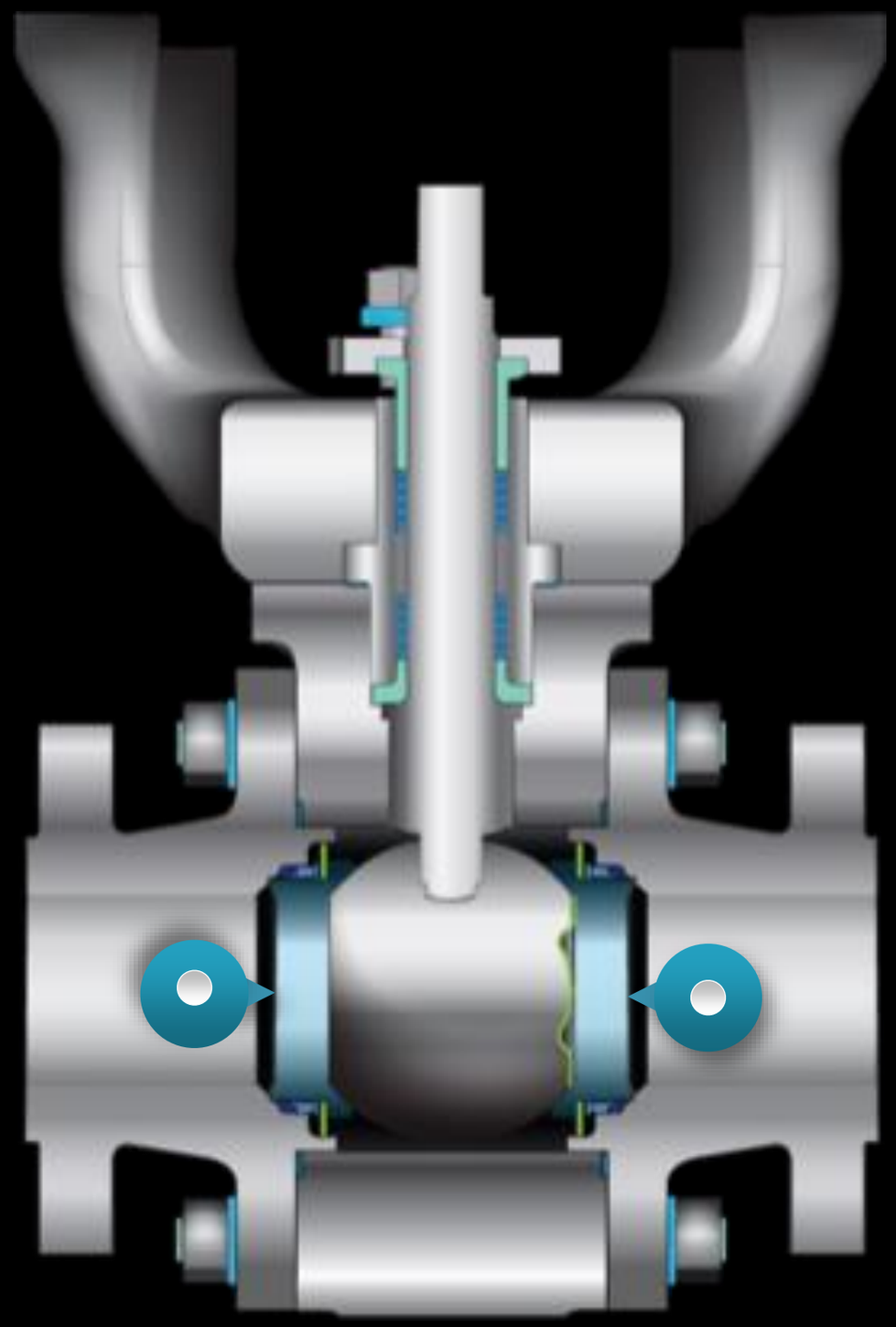

FEATURES

Superior Trim Hardening

Tripod Mounting Bracket

Seat/Spring Design

Arcuate Cut or Vari V Ball

Dual Shaft Packing

Bi-directional Sealing

SUPERIOR TRIM HARDENING

M-CLASS

CUSTOM METAL SEATED

"HARD ASS"

gosco VALVES

COMPETITION – HVOF

HIGH VELOCITY OXYGEN FUEL

Uneven coating (line of sight)

Cracks / spalls

Coating is porous

Internal bore of ball can not be coated

"NOT ALL IT'S CRACKED UP TO BE"

GOSCO – BORONIZING

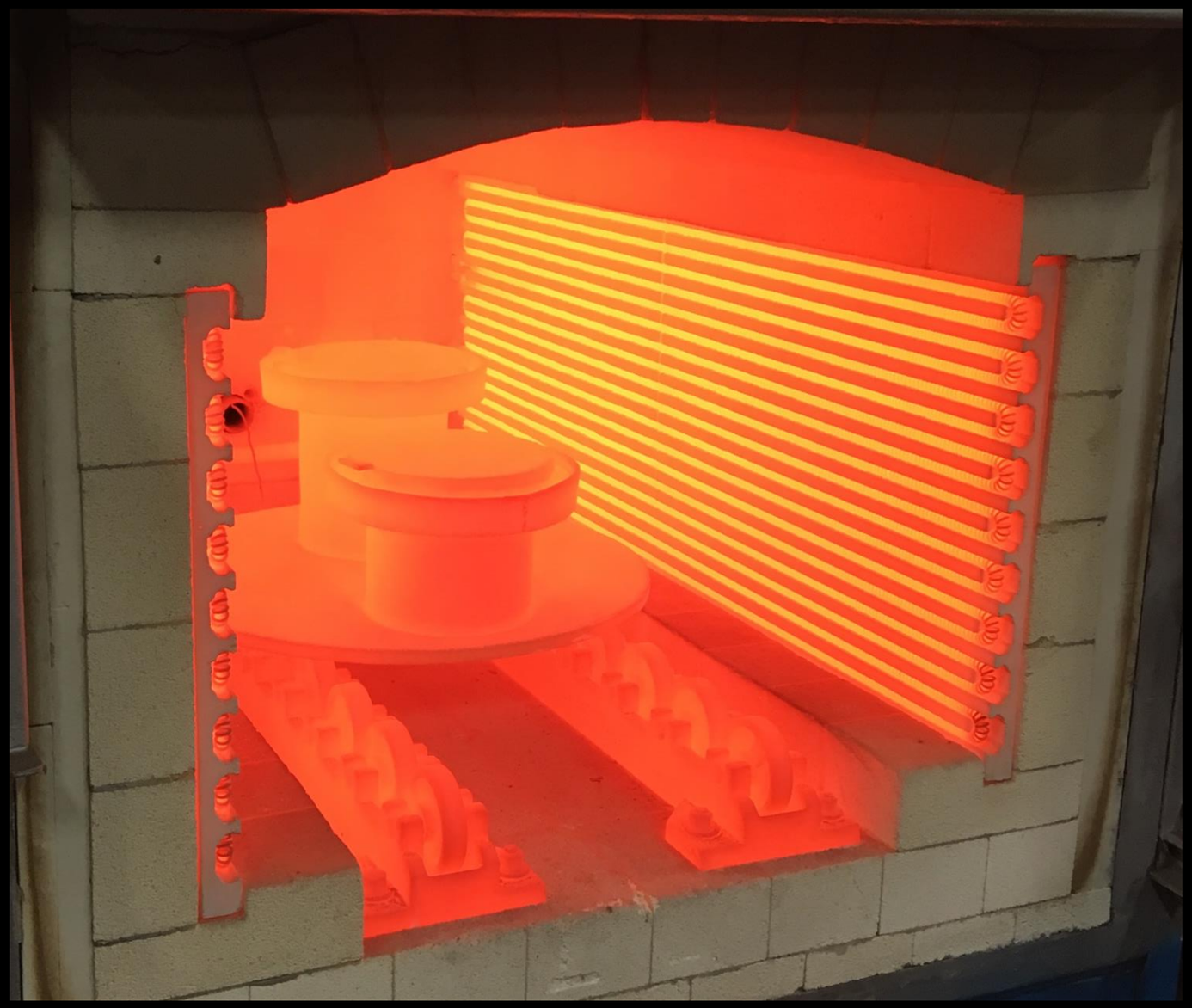

BORONIZING

Proprietary Gosco Process

Thermo-chemical surface hardening process

Boron atoms are diffused into the surface

Results in a case layer that is extremely hard, corrosion resistant, and capable of handling high temperature shocks

Inconel 718, 200x magnification
.0035” solid layer, .007” partial layer

BORONIZING

STARTS WITH THE BASE MATERIAL

Inconel 718 is the best material for severe service applications

Designed for high temperature applications

Extremely hard

Very corrosion resistant

Has a high nickel content to eliminate stress corrosion cracking

THEN - IT'S ALL ABOUT PREPARATION OF THE PARTS

There are 6 steps before the trim sets are sent to be borided:

1. Rough machining
2. Stress relieving
3. Finish machining
4. Grinding
5. Four levels of lapping
6. Vacuum testing

LAST – IT'S ALL ABOUT THE BORONIZING PROCESS

1. Cleaned to eliminate any residue
2. Boronized using our proprietary boronizing process
3. Finished lapped
4. Vacuum tested

COMPETITOR ON COATINGS

APPLICATION NOTE ON COATINGS

Common Coatings

Method of Application	HVOF		Fusion	Plasma	Diffused		Patented
Material	Chromium Carbide	Tungsten Carbide	Chromium Carbide	Chromuim Oxide	Nitride	Boride	Nano Titanium Dioxide
Uses	General Severe Service, Power, Slurry Mining, Chemical	Specialized Severe Service, Mining, Food Processing, Corrosive Chemical	Specialized Severe Service, Power, Thermal Shock, Extreme Temperature	Corrosive Service, Gold Mining	General Service, Bearings, Hot Gas	Specialized Severe Service, Power Corrosive Services, Thermal Shock	Corrosive Service, Gold Mining, Nickel Mining, High Pressure Acid Leach
Base Metals	Any	Any	300 Series Stainless Nickel Alloys	Any, Duplex SS & Ti Typical	Iron-Based Alloys	Nickel-Based Alloys	Any, Duplex SS & Ti Typical
Advantages	High Strain to Fracture, Erosion-Resistant, Extreme Temperature	Erosion-Resistant, Wear-Resistant	Erosion-Resistant, Non-Porous, Thermal Shock, Metallurgical Bond, Corrosion Resistant	Very Corrosion Resistant at lower temperatures	Inexpensive Metallurgical Bond	Extremely Hard, Metallurgical Bond, Non-Porous, Corrosion Resistant	Very Corrosion Resistant at low and high temperatures, superior wear to conventional ceramic coatings
Disadvantages	Some Porosity, Mechanical Bond	Some Porosity, Mechanical Bond, Thermal Cycling Can Produce Cracking	Not Suitable on 410 SS 17-4PH Carbon Steel, Expensive	Poor Thermal Shock, Poor Bond Strength, Porosity, & Cracking are Typical	Reduces Corrosion Resistance, Lower Abrasion & Wear Resistance than HVOF Coatings	Very Thin .001" Finished, Bore Size Limit 1.5"	Ceramic coatings are not as tough as HVOF cermets

COMPETITOR ON COATINGS

Method of Application	HVOF	
Material	Chromium Carbide	Tungsten Carbide
Uses	General Severe Service, Power, Slurry Mining, Chemical	Specialized Severe Service, Mining, Food Processing, Corrosive Chemical
Base Metals	Any	Any
Advantages	High Strain to Fracture, Erosion-Resistant, Extreme Temperature	Erosion-Resistant, Wear-Resistant
Disadvantages	Some Porosity, Mechanical Bond	Some Porosity, Mechanical Bond, Thermal Cycling Can Produce Cracking

Plasma	Diffused		Patented
Chromuim Oxide	Nitride	Boride	Nano Titanium Dioxide
Corrosive Service, Gold Mining	General Service, Bearings, Hot Gas	Specialized Severe Service, Power Corrosive Services, Thermal Shock	Corrosive Service, Gold Mining, Nickel Mining, High Pressure Acid Leach
Any, Duplex SS & Ti Typical	Iron-Based Alloys	Nickel-Based Alloys	Any, Duplex SS & Ti Typical
Very Corrosion Resistant at lower temperatures	Inexpensive Metallurgical Bond	Extremely Hard, Metallurgical Bond, Non-Porous, Corrosion Resistant	Very Corrosion Resistant at low and high temperatures, superior wear to conventional ceramic coatings
Poor Thermal Shock, Poor Bond Strength, Porosity, & Cracking are Typical	Reduces Corrosion Resistance, Lower Abrasion & Wear Resistance than HVOF Coatings	Very Thin .001" Finished, Bore Size Limit 1.5"	Ceramic coatings are not as tough as HVOF cermets

"NOT ALL IT'S CRACKED UP TO BE"

COMPETITOR ON COATINGS

Method of Application	HVOF	
Material	Chromium Carbide	Tungsten Carbide
Uses	General Severe Service, Power, Slurry Mining, Chemical	Specialized Severe Service, Mining, Food Processing, Corrosive Chemical
Base Metals	Any	Any
Advantages	High Strain to Fracture, Erosion-Resistant, Extreme Temperature	Erosion-Resistant, Wear-Resistant
Disadvantages	Some Porosity, Mechanical Bond	Some Porosity, Mechanical Bond, Thermal Cycling Can Produce Cracking

Plasma	Diffused		Patented
Chromuim Oxide	Nitride	Boride	Nano Titanium Dioxide
Corrosive Service, Gold Mining	General Service, Bearings, Hot Gas	Specialized Severe Service, Power Corrosive Services, Thermal Shock	Corrosive Service, Gold Mining, Nickel Mining, High Pressure Acid Leach
Any, Duplex SS & Ti Typical	Iron-Based Alloys	Nickel-Based Alloys	Any, Duplex SS & Ti Typical
Very Corrosion Resistant at lower temperatures	Inexpensive Metallurgical Bond	Extremely Hard, Metallurgical Bond, Non-Porous, Corrosion Resistant	Very Corrosion Resistant at low and high temperatures, superior wear to conventional ceramic coatings
Poor Thermal Shock, Poor Bond Strength, Porosity, & Cracking are Typical	Reduces Corrosion Resistance, Lower Abrasion & Wear Resistance than HVOF Coatings	Very Thin .001" Finished, Bore Size Limit 1.5"	Ceramic coatings are not as tough as HVOF cermets

"NOT ALL IT'S CRACKED UP TO BE"

COMPETITOR ON COATINGS

Method of Application	HVOF	
Material	Chromium Carbide	Tungsten Carbide
Uses	General Severe Service, Power, Slurry Mining, Chemical	Specialized Severe Service, Mining, Food Processing, Corrosive Chemical
Base Metals	Any	Any
Advantages	High Strain to Fracture, Erosion-Resistant, Extreme Temperature	Erosion-Resistant, Wear-Resistant
Disadvantages	Some Porosity, Mechanical Bond	Some Porosity, Mechanical Bond, Thermal Cycling Can Produce Cracking

Plasma	Diffused		Patented
Chromuim Oxide	Nitride	Boride	Nano Titanium Dioxide
Corrosive Service, Gold Mining	General Service, Bearings, Hot Gas	Specialized Severe Service, Power Corrosive Services, Thermal Shock	Corrosive Service, Gold Mining, Nickel Mining, High Pressure Acid Leach
Any, Duplex SS & Ti Typical	Iron-Based Alloys	Nickel-Based Alloys	Any, Duplex SS & Ti Typical
Very Corrosion Resistant at lower temperatures	Inexpensive Metallurgical Bond	Extremely Hard, Metallurgical Bond, Non-Porous, Corrosion Resistant	Very Corrosion Resistant at low and high temperatures, superior wear to conventional ceramic coatings
Poor Thermal Shock, Poor Bond Strength, Porosity, & Cracking are Typical	Reduces Corrosion Resistance, Lower Abrasion & Wear Resistance than HVOF Coatings	Very Thin .001" Finished, Bore Size Limit 1.5"	Ceramic coatings are not as tough as HVOF cermets

"NOT ALL IT'S CRACKED UP TO BE"

COMPETITOR ON COATINGS

Method of Application	HVOF	
Material	Chromium Carbide	Tungsten Carbide
Uses	General Severe Service, Power, Slurry Mining, Chemical	Specialized Severe Service, Mining, Food Processing, Corrosive Chemical
Base Metals	Any	Any
Advantages	High Strain to Fracture, Erosion-Resistant, Extreme Temperature	Erosion-Resistant, Wear-Resistant
Disadvantages	Some Porosity, Mechanical Bond	Some Porosity, Mechanical Bond, Thermal Cycling Can Produce Cracking

Method of Application	Diffused	
Material	Nitride	Boride
Uses	General Service Bearings, Hot Gas	Specialized Severe Service, Power Corrosive Services, Thermal Shock
Base Metals	Iron-Based Alloys	Nickel-Based Alloys
Advantages	Inexpensive Metallurgical Bond	Extremely Hard, Metallurgical Bond, Non-Porous, Corrosion Resistant
Disadvantages	Reduces Corrosion Resistance, Lower Abrasion & Wear Resistance than HVOF Coatings	Very Thin .001" Finished, Bore Size Limit 1.5"

"NOT ALL IT'S CRACKED UP TO BE" *"HARD ASS"*

COMPETITOR ON COATINGS

Method of Application	HVOF	
Material	Chromium Carbide	Tungsten Carbide
Uses	General Severe Service, Power, Slurry Mining, Chemical	Specialized Severe Service, Mining, Food Processing, Corrosive Chemical
Base Metals	Any	Any
Advantages	High Strain to Fracture, Erosion-Resistant, Extreme Temperature	Erosion-Resistant, Wear-Resistant
Disadvantages	Some Porosity, Mechanical Bond	Some Porosity, Mechanical Bond, Thermal Cycling Can Produce Cracking

Method of Application	Diffused	
Material	Nitride	Boride
Uses	General Service Bearings, Hot Gas	Specialized Severe Service, Power Corrosive Services, Thermal Shock
Base Metals	Iron-Based Alloys	Nickel-Based Alloys
Advantages	Inexpensive Metallurgical Bond	Extremely Hard, Metallurgical Bond, Non-Porous, Corrosion Resistant
Disadvantages	Reduces Corrosion Resistance, Lower Abrasion & Wear Resistance than HVOF Coatings	Very Thin .001" Finished, Bore Size Limit 1.5"

"NOT ALL IT'S CRACKED UP TO BE" *"HARD ASS"*

COMPETITOR ON COATINGS

Method of Application	HVOF	
Material	Chromium Carbide	Tungsten Carbide
Uses	General Severe Service, Power, Slurry Mining, Chemical	Specialized Severe Service, Mining, Food Processing, Corrosive Chemical
Base Metals	Any	Any
Advantages	High Strain to Fracture, Erosion-Resistant, Extreme Temperature	Erosion-Resistant, Wear-Resistant
Disadvantages	Some Porosity, Mechanical Bond	Some Porosity, Mechanical Bond, Thermal Cycling Can Produce Cracking

Method of Application	Diffused	
Material	Nitride	Boride
Uses	General Service Bearings, Hot Gas	Specialized Severe Service, Power Corrosive Services, Thermal Shock
Base Metals	Iron-Based Alloys	Nickel-Based Alloys
Advantages	Inexpensive Metallurgical Bond	Extremely Hard, Metallurgical Bond, Non-Porous, Corrosion Resistant
Disadvantages	Reduces Corrosion Resistance, Lower Abrasion & Wear Resistance than HVOF Coatings	Very Thin .001" Finished, Bore Size Limit 1.5"

"NOT ALL IT'S CRACKED UP TO BE" *"HARD ASS"*

GOSCO'S PROPRIETARY BORONIZING PROCESS

0.004" to 0.007" depth

No size limit

Considerably harder than any coating

All the advantages, no disadvantages

"NO BRAINER"

ACTUATOR MOUNTING

M-CLASS

CUSTOM METAL SEATED

"BALANCING ACT"

gosco VALVES

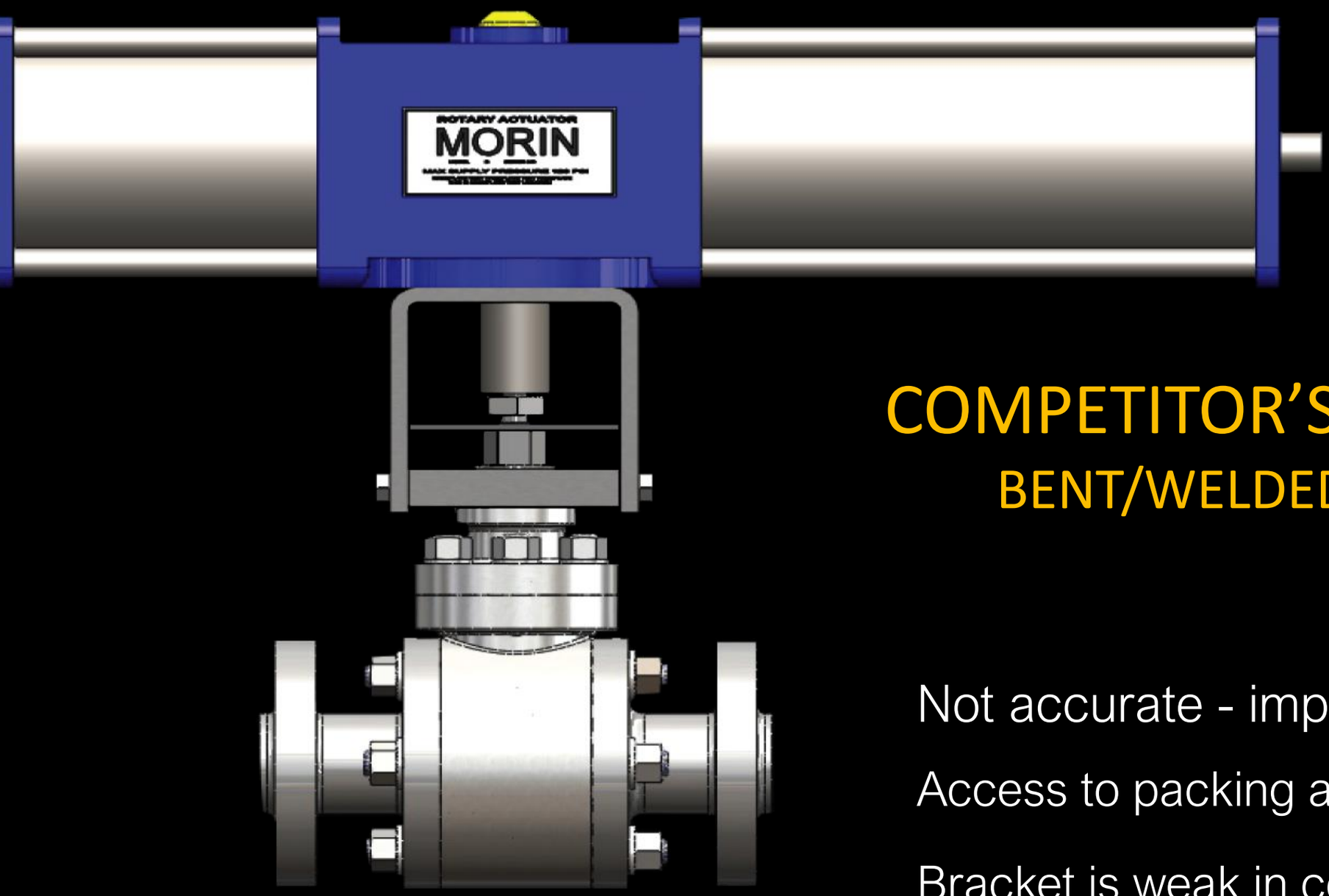

COMPETITOR'S MOUNTING

BENT/WELDED BRACKET`

Not accurate - improper actuator alignment

Access to packing adjustments is limited

Bracket is weak in certain orientations

BENT/WELDED BRACKET

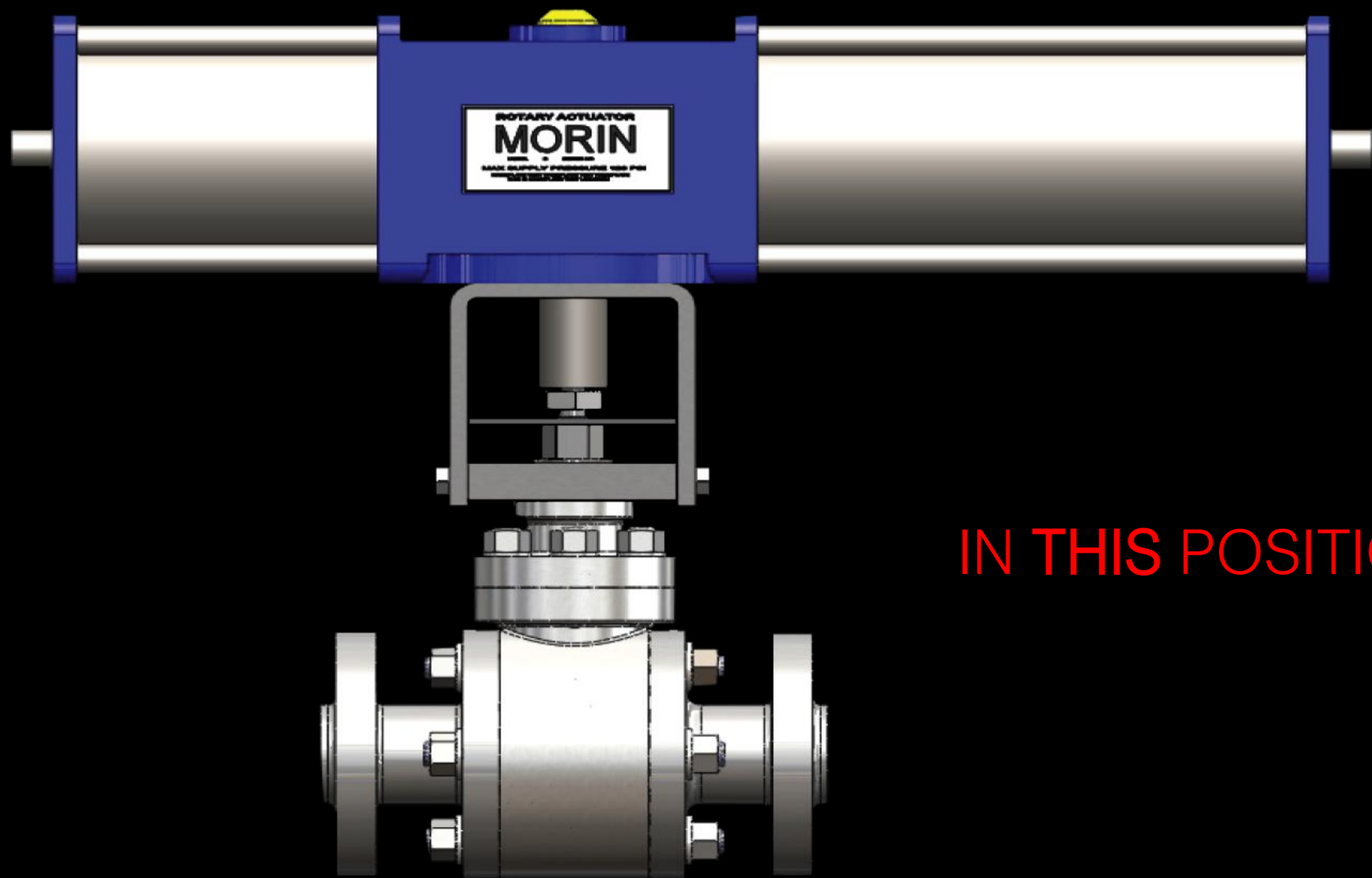

IN **THIS** POSITION

M-CLASS
CUSTOM METAL SEATED

"BENT OUT OF SHAPE"

gosco VALVES

BENT/WELDED BRACKET

IN **ANY** OTHER POSITION

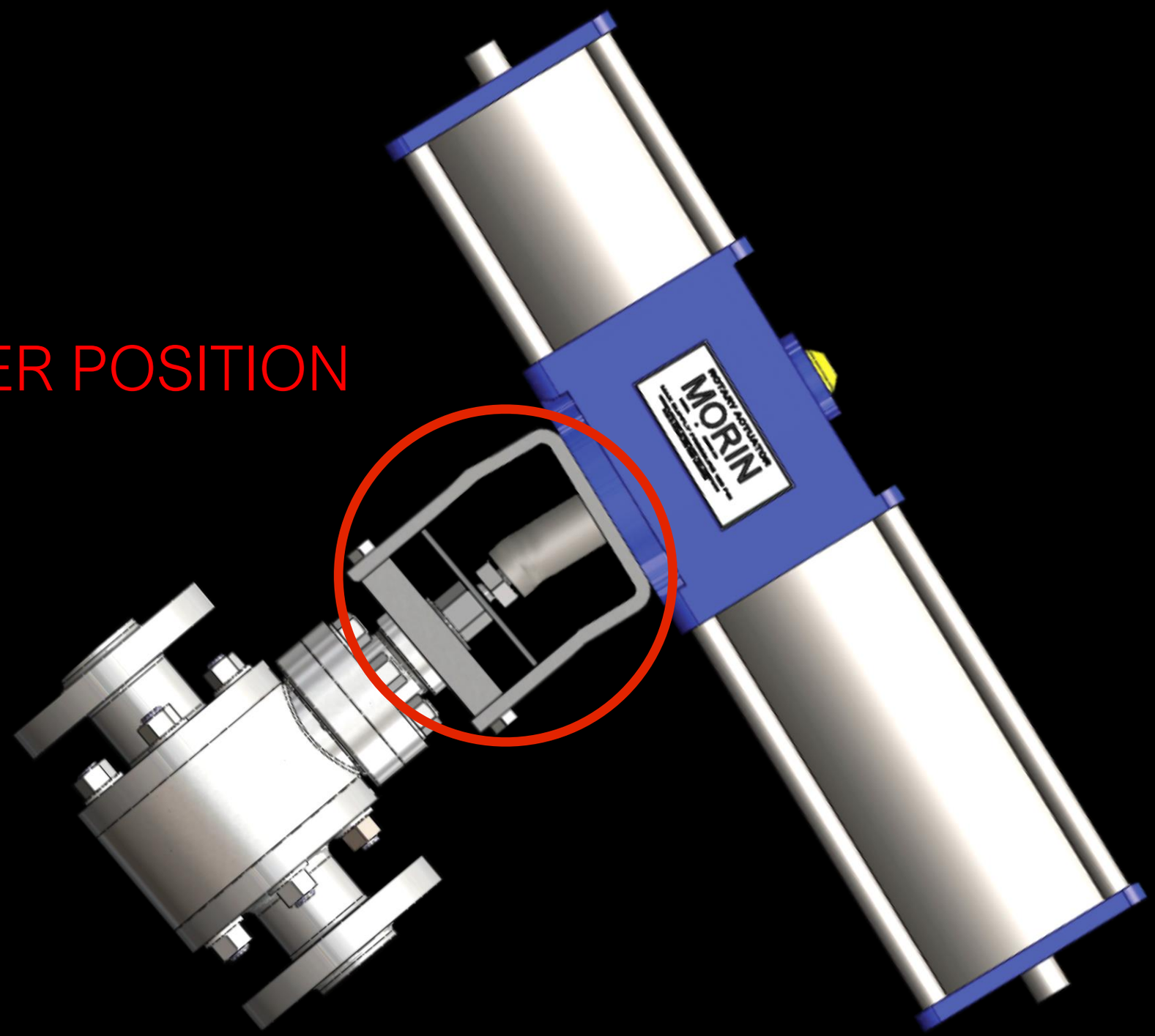

"BENT OUT OF SHAPE"

TRIPOD MOUNTING SYSTEM

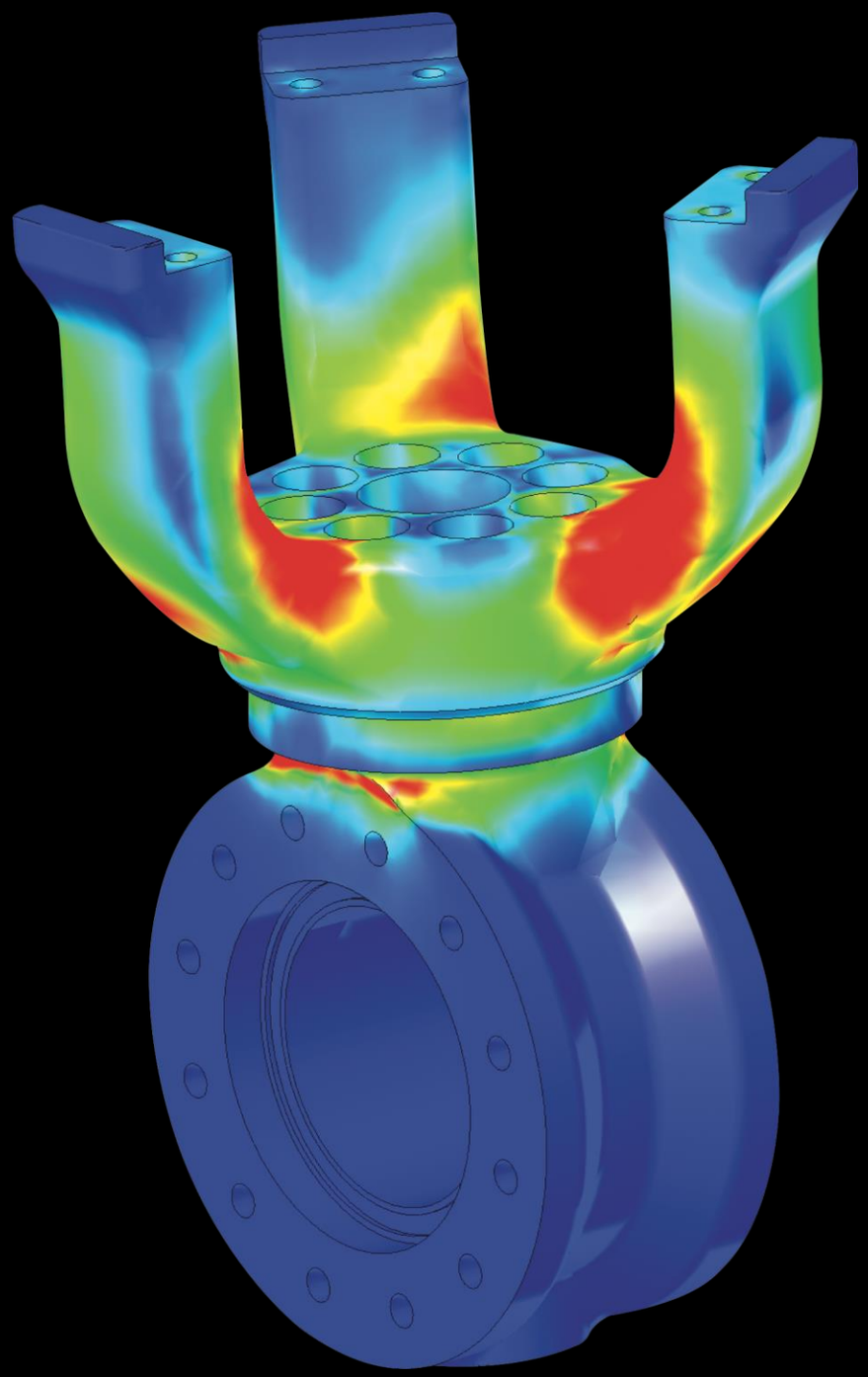

The tripod is designed to handle
"Worst Case Scenario"

Finite Element Analysis (FEA) shows "Stressed" areas

Tripod is much larger than a traditional bracket

Supports the actuator regardless of valve orientation

TRIPOD MOUNT

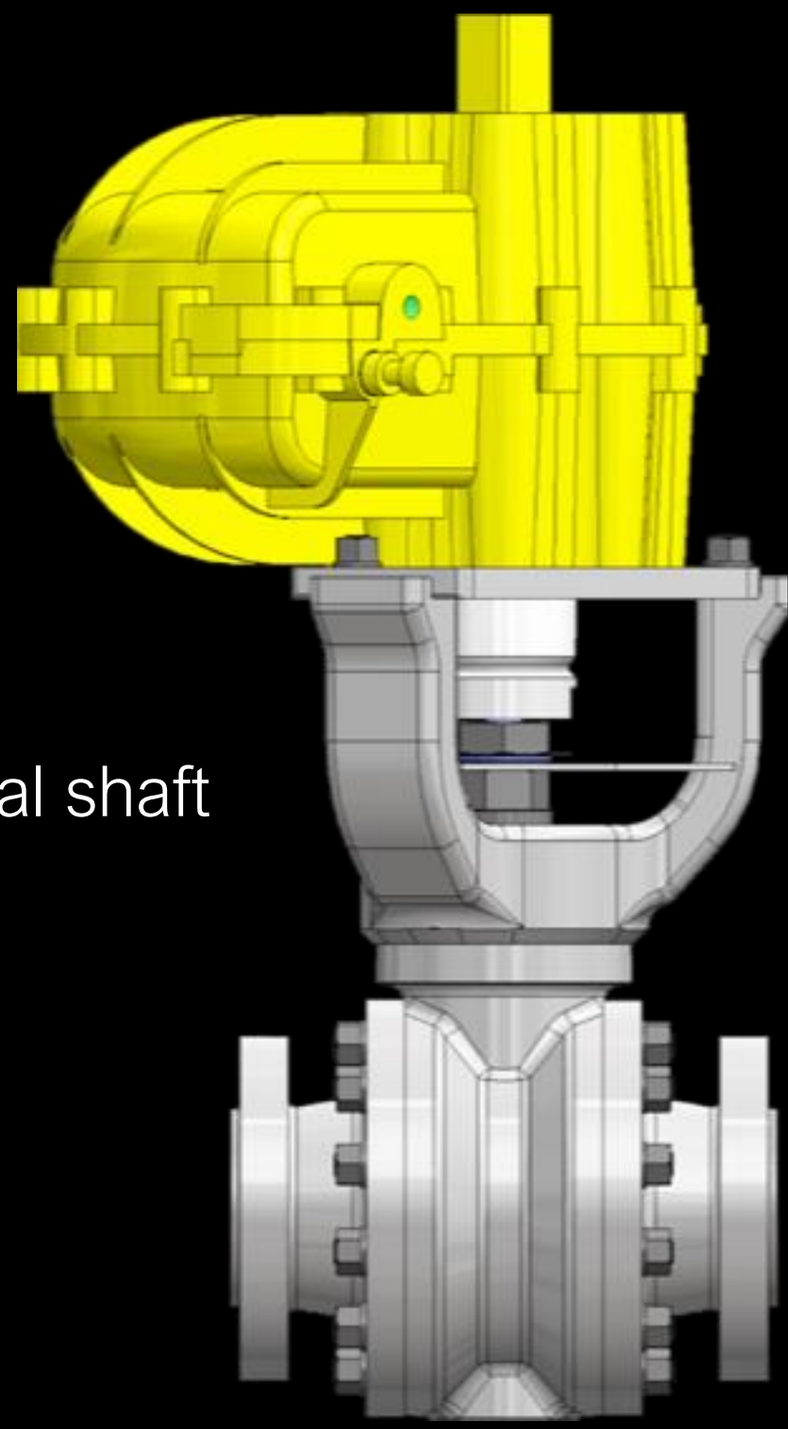

Horizontal pipeline, vertical shaft

TRIPOD MOUNT

45 degree pipeline, vertical shaft

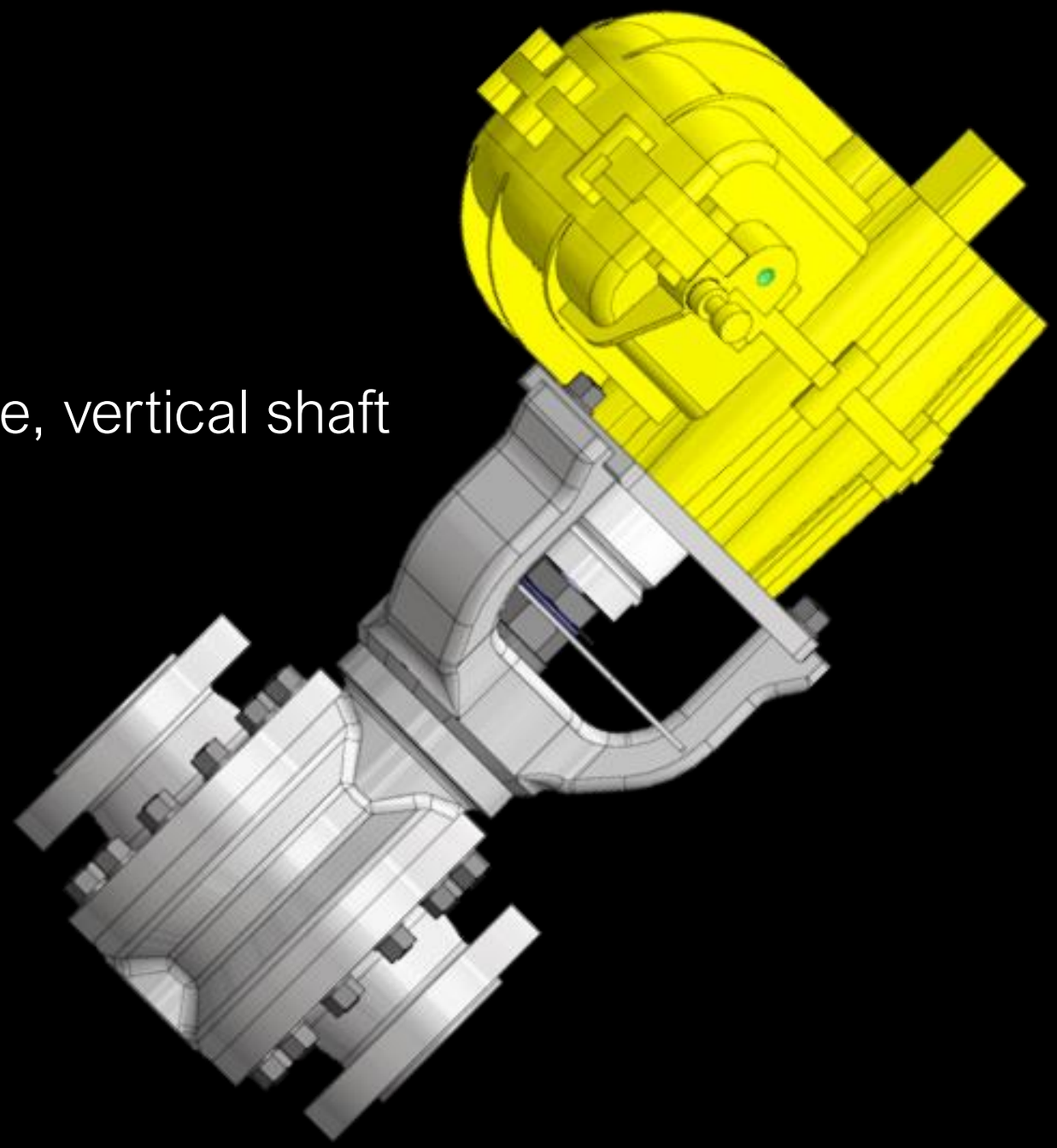

TRIPOD MOUNT

Vertical pipeline, horizontal shaft

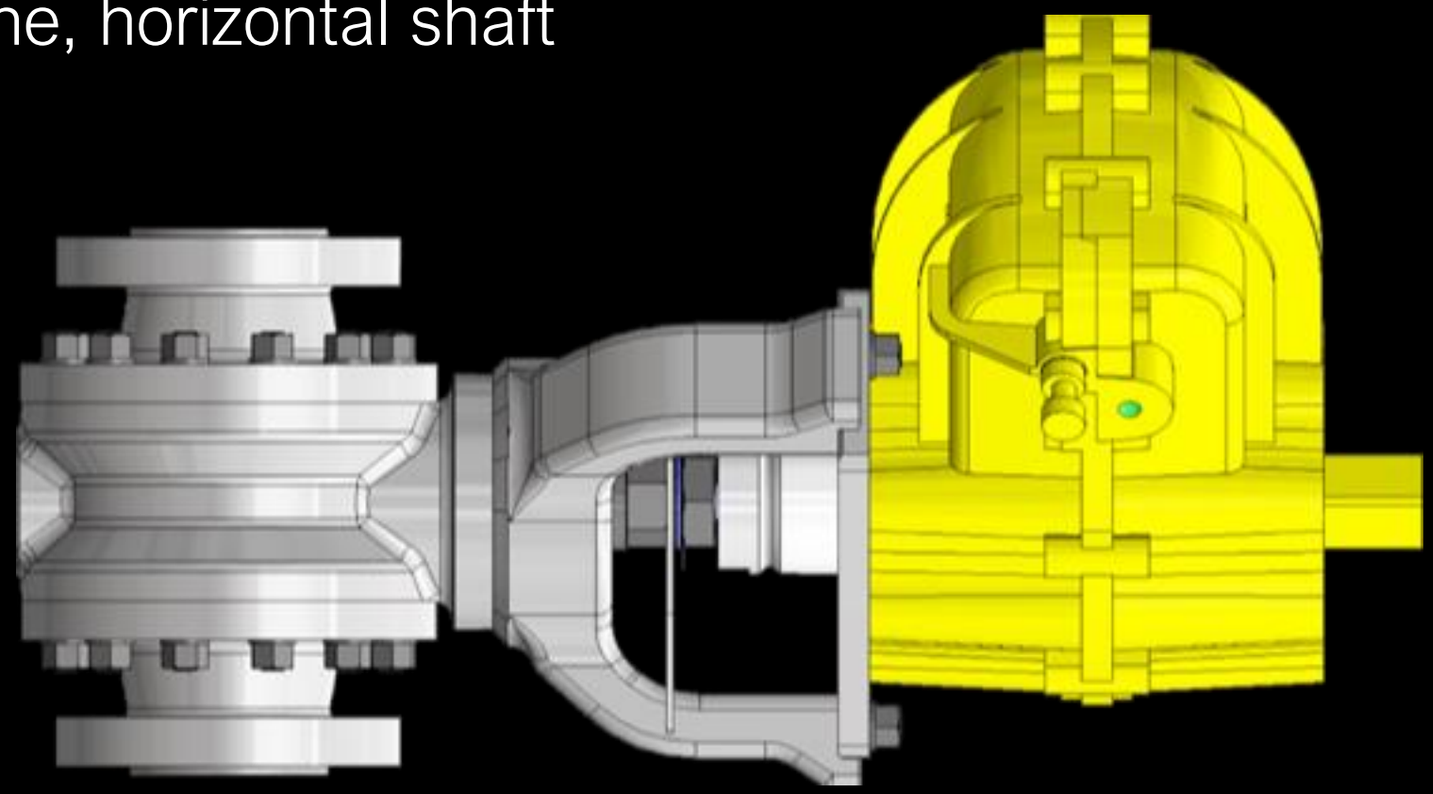

TRIPOD MOUNT

Horizontal pipeline, horizontal shaft

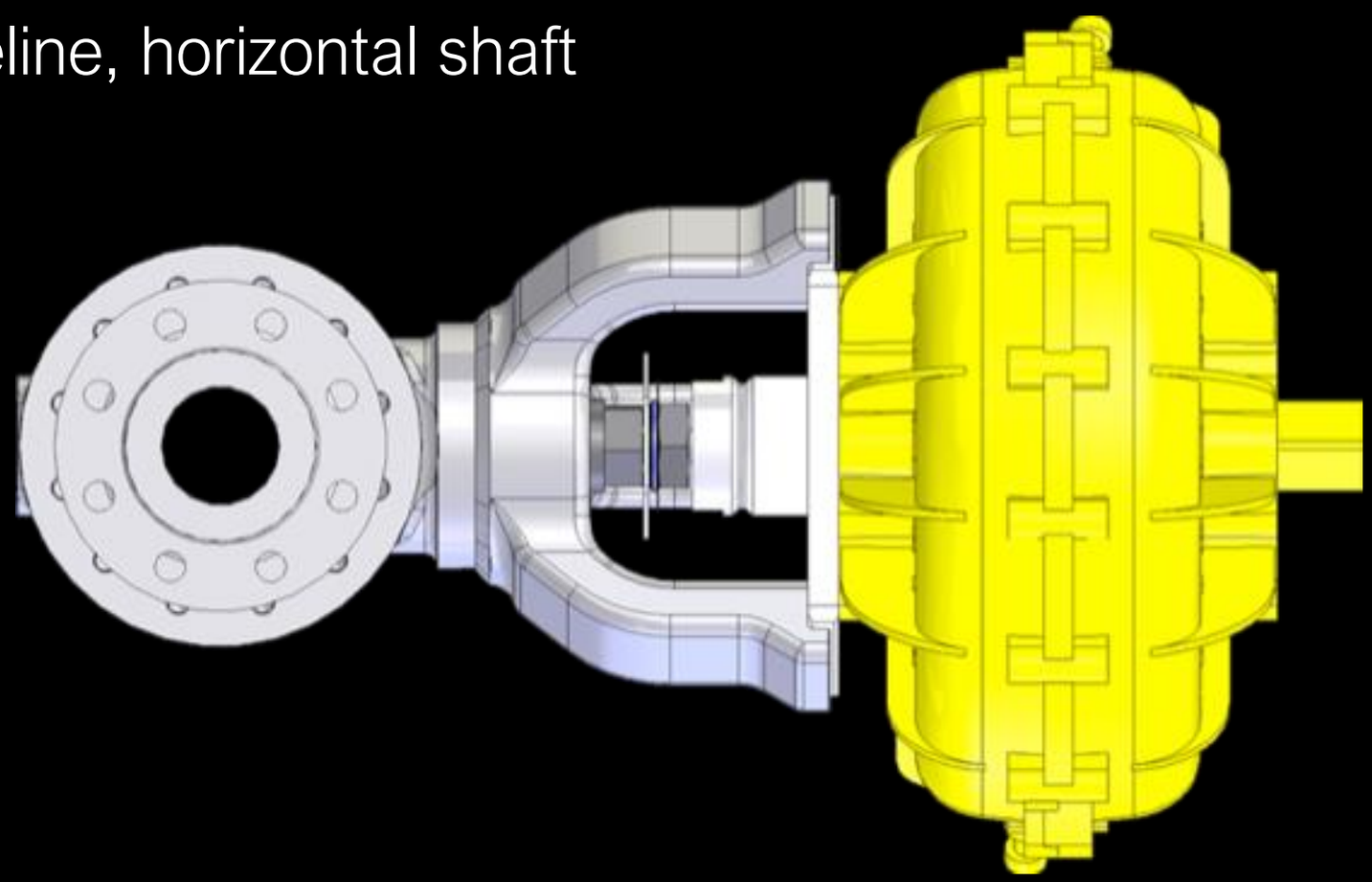

TRIPOD MOUNT

Perfectly Flat
(3 points define a plane)

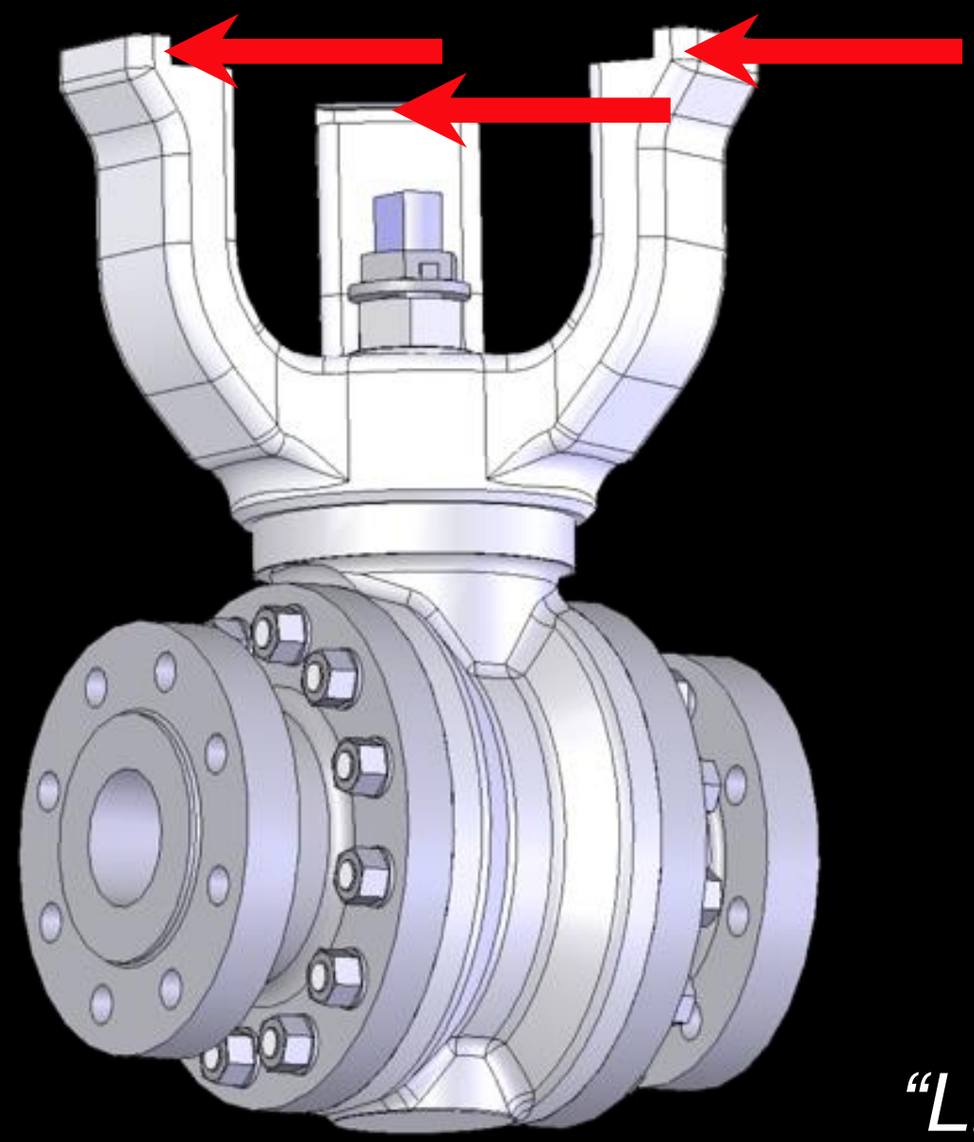

M-CLASS
CUSTOM METAL SEATED

"LEVEL HEADED"

gosco VALVES

TRIPOD MOUNT

Perfectly Flat
(3 points define a plane)

Easy to Assemble

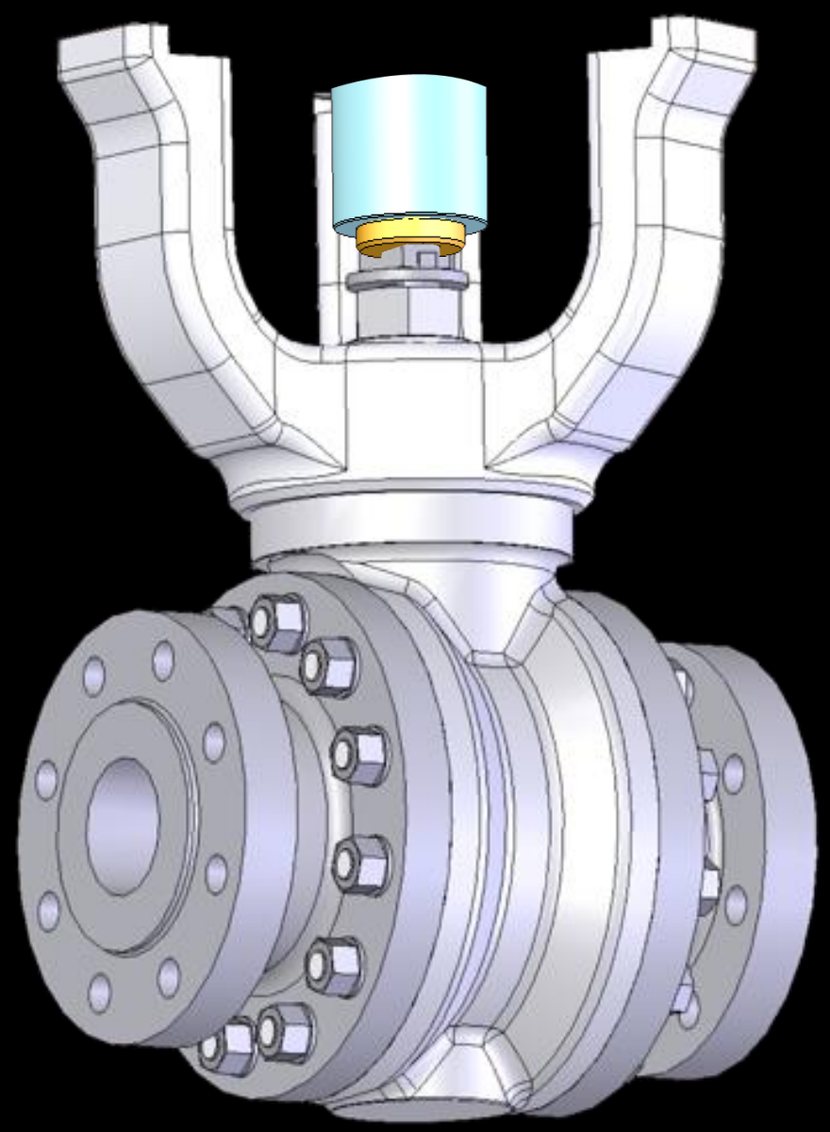

M-CLASS
CUSTOM METAL SEATED

"LEVEL HEADED"

gosco VALVES

TRIPOD MOUNT

Perfectly Flat
(3 points define a plane)

Easy to Assemble

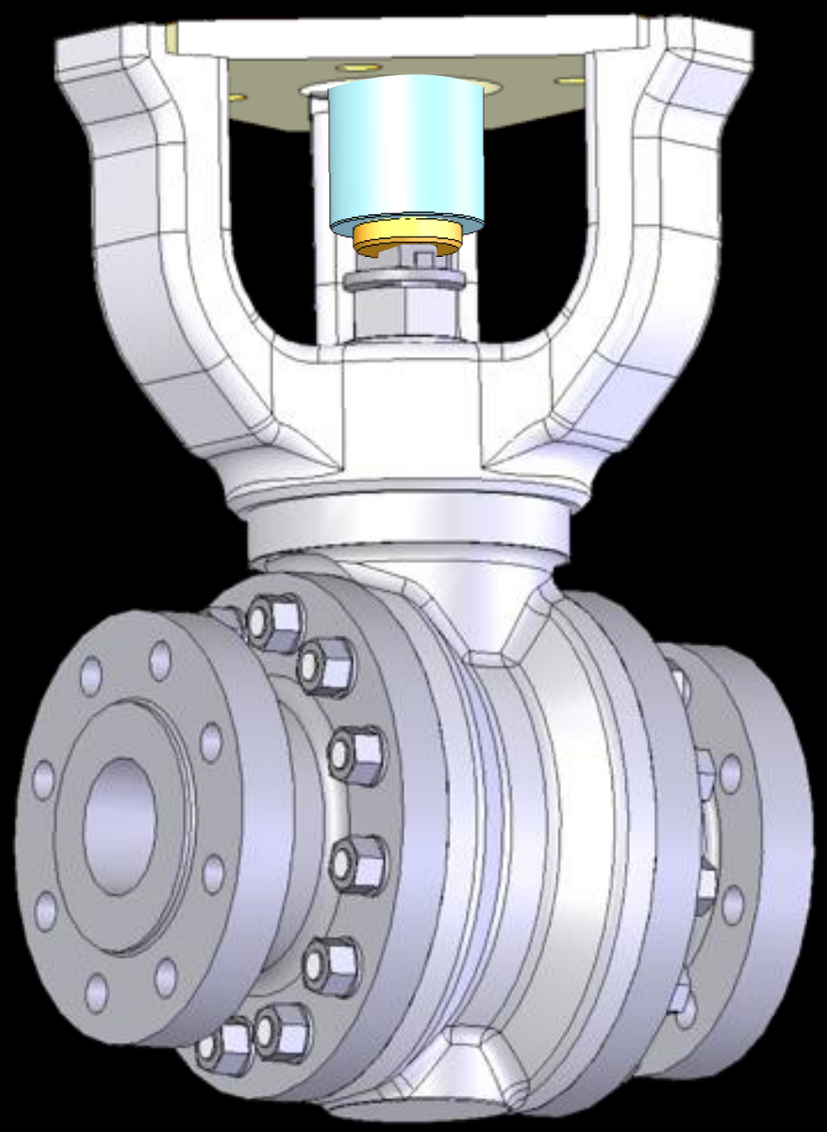

M-CLASS
CUSTOM METAL SEATED

"LEVEL HEADED"

gosco VALVES

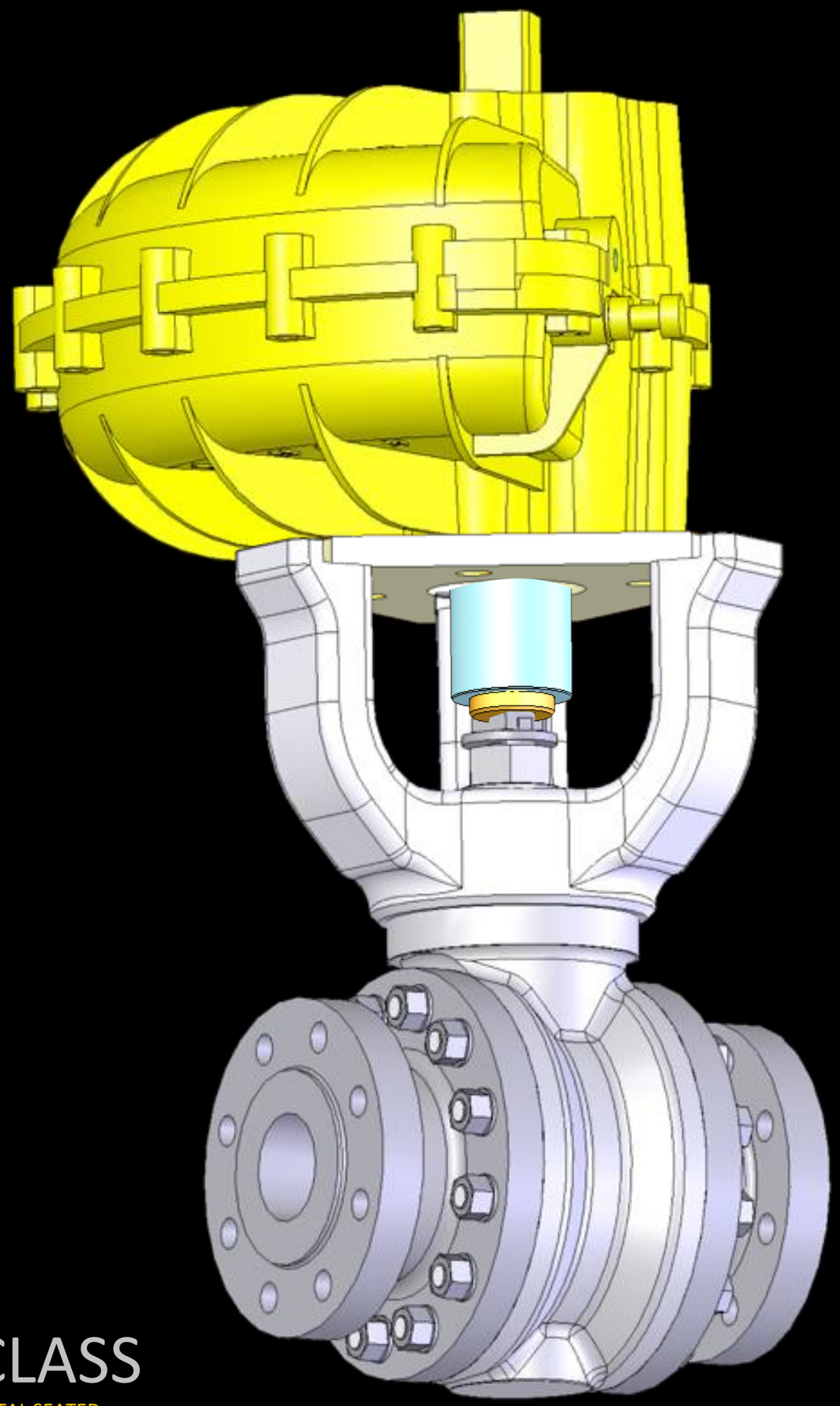

TRIPOD MOUNT

Perfectly Flat
(3 points define a plane)

Easy to Assemble

M-CLASS
CUSTOM METAL SEATED

"LEVEL HEADED"

gosco VALVES

TRIPOD MOUNT

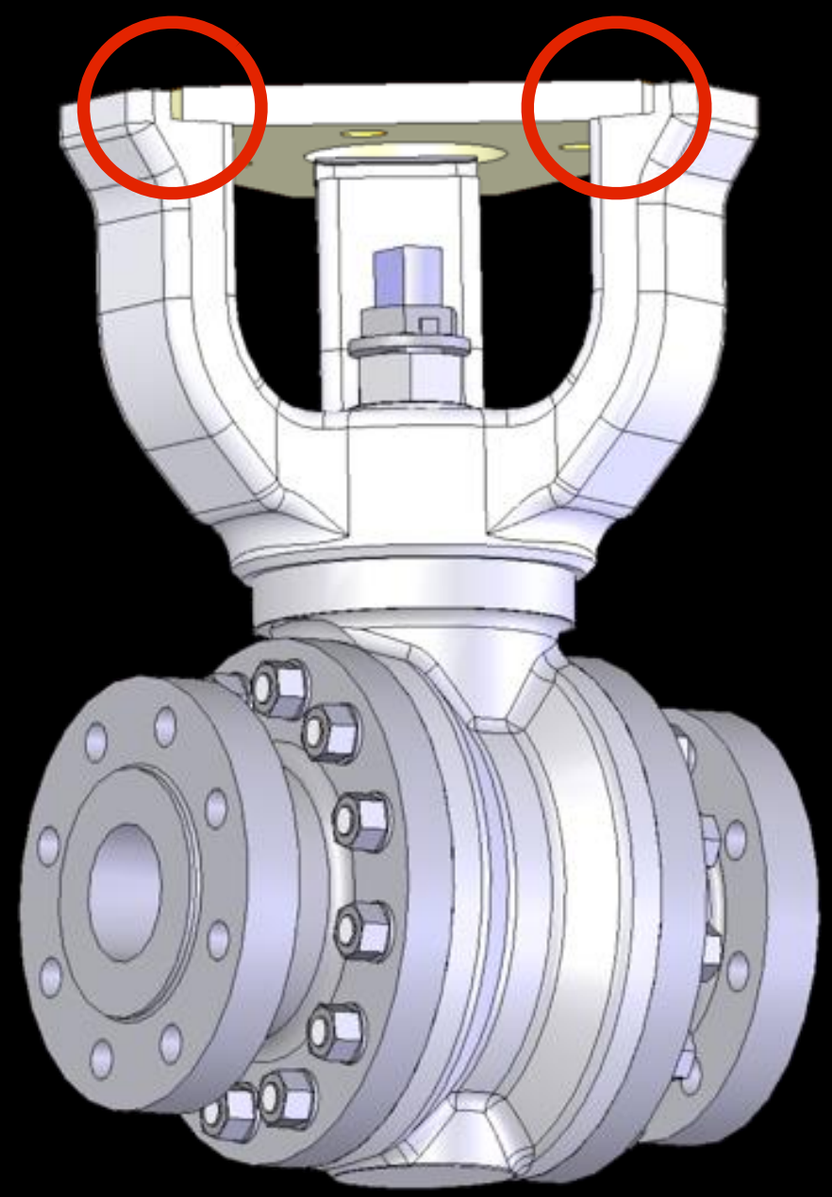

Perfectly Flat
(3 points define a plane)

Easy to Assemble

Perfectly Aligned
(Mounting plate/Tripod prongs are CNC machined)

M-CLASS
CUSTOM METAL SEATED

"LEVEL HEADED"

gosco VALVES

TRIPOD MOUNT

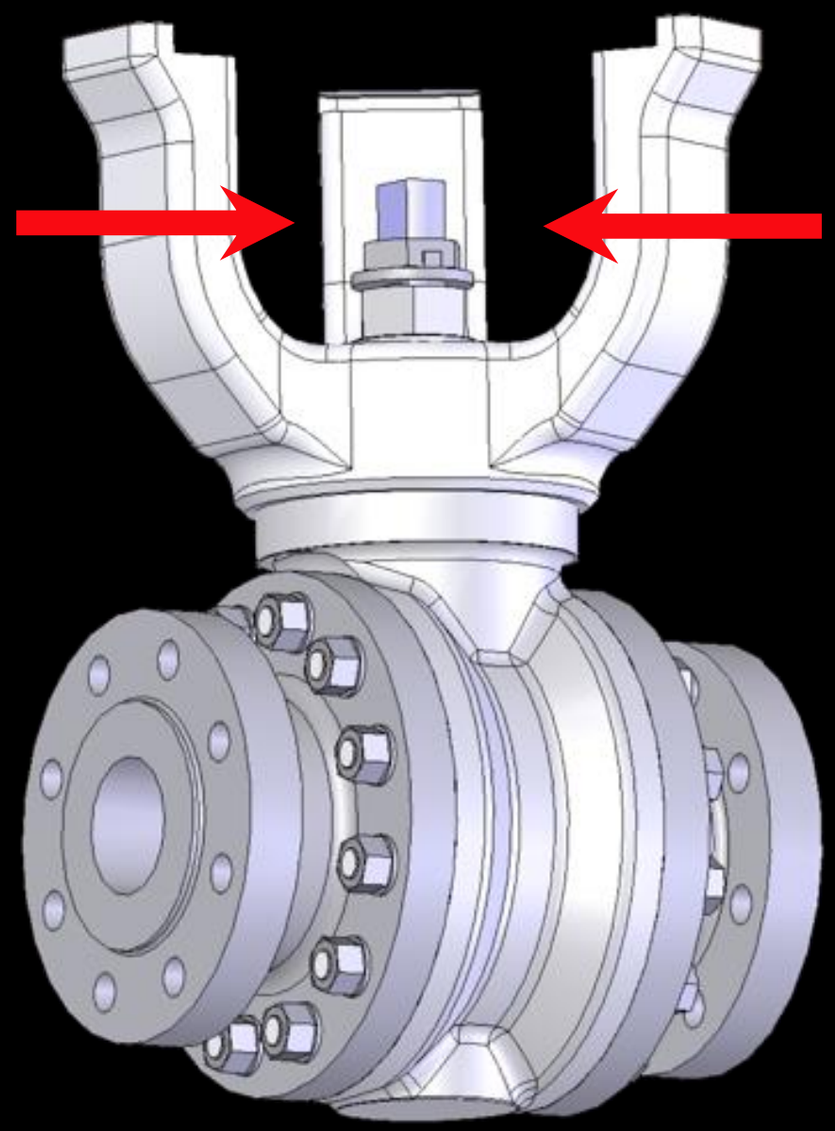

Perfectly Flat
(3 points define a plane)

Easy to Assemble

Perfectly Aligned
(Mounting plate/Tripod prongs are CNC machined)

Open Between The Prongs
(Acts as a heat sink / easy access to packing)

M-CLASS
CUSTOM METAL SEATED

"LEVEL HEADED"

gosco VALVES

SEAT DESIGN

M-CLASS

CUSTOM METAL SEATED

“FREE FALL”

gosco VALVES

COMPETITOR'S SEAT/SPRING DESIGN

M-CLASS

CUSTOM METAL SEATED

"ALL PLUGGED UP"

gosco VALVES

COMPETITOR'S SEAT/SPRING DESIGN

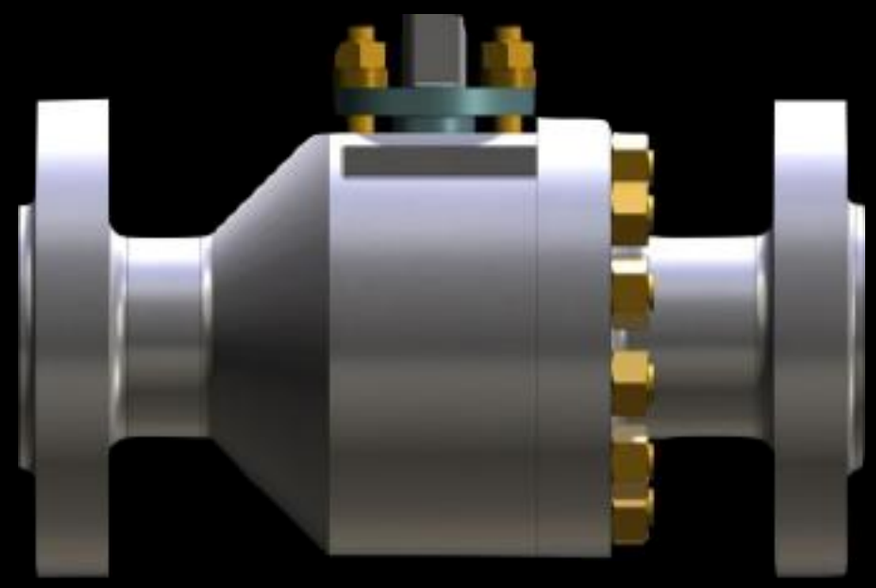

"ALL PLUGGED UP"

COMPETITOR'S SEAT/SPRING DESIGN

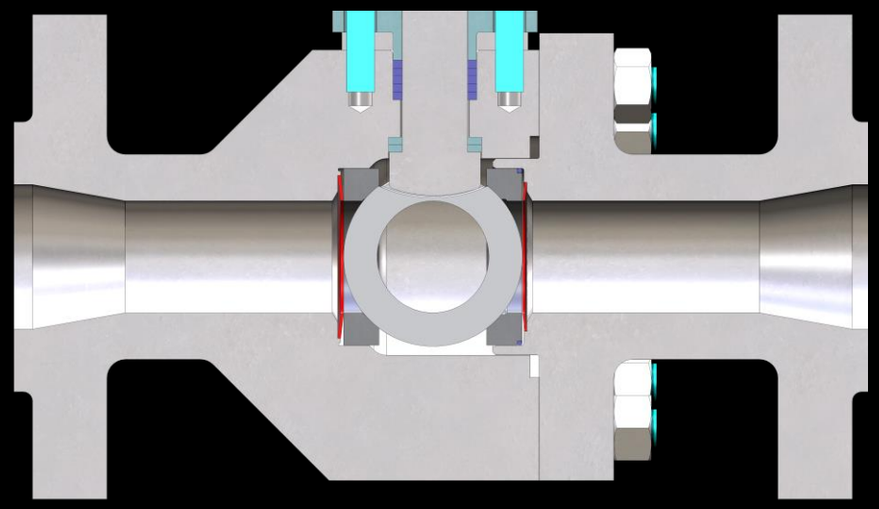

"ALL PLUGGED UP"

COMPETITOR'S SEAT/SPRING DESIGN

Belleville springs

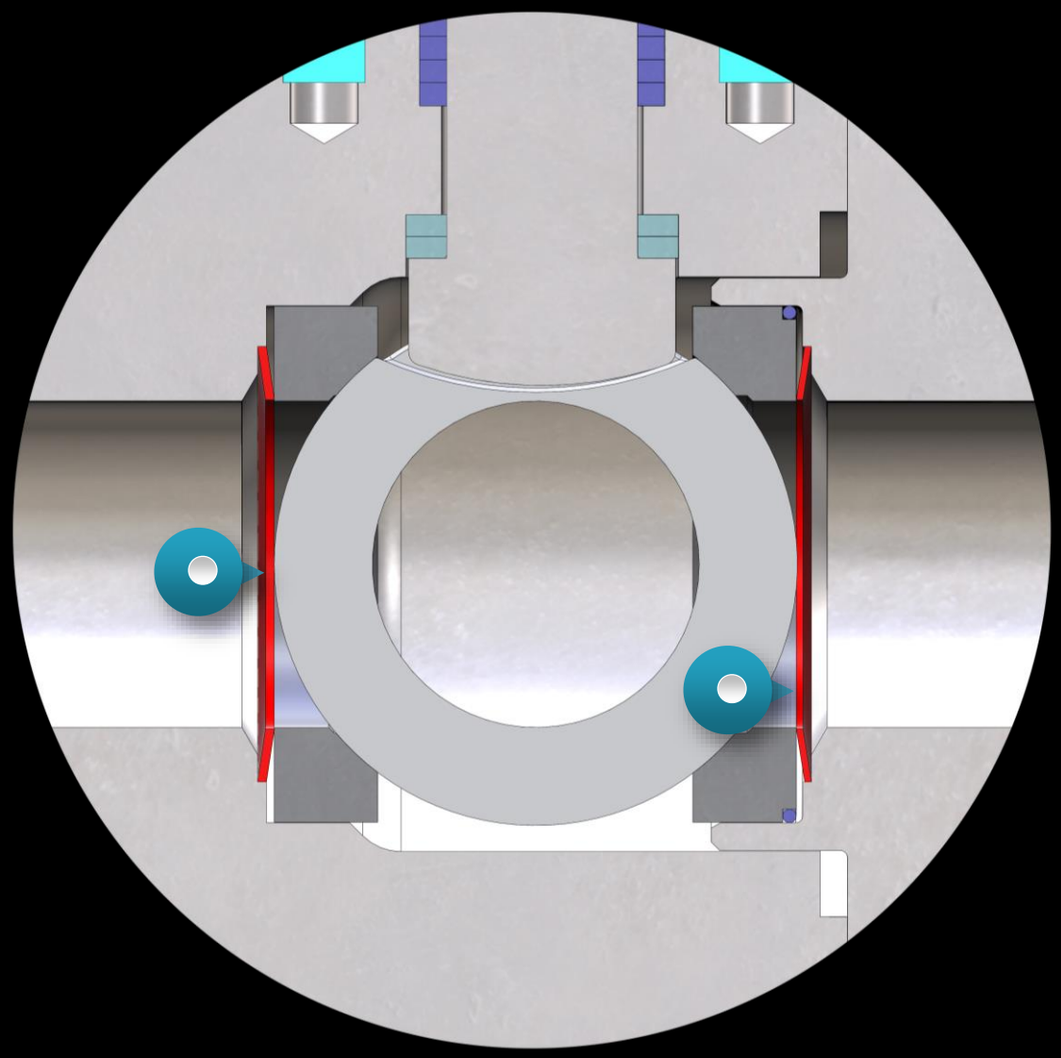

COMPETITOR'S SEAT/SPRING DESIGN

Media gets trapped around the Bellevilles

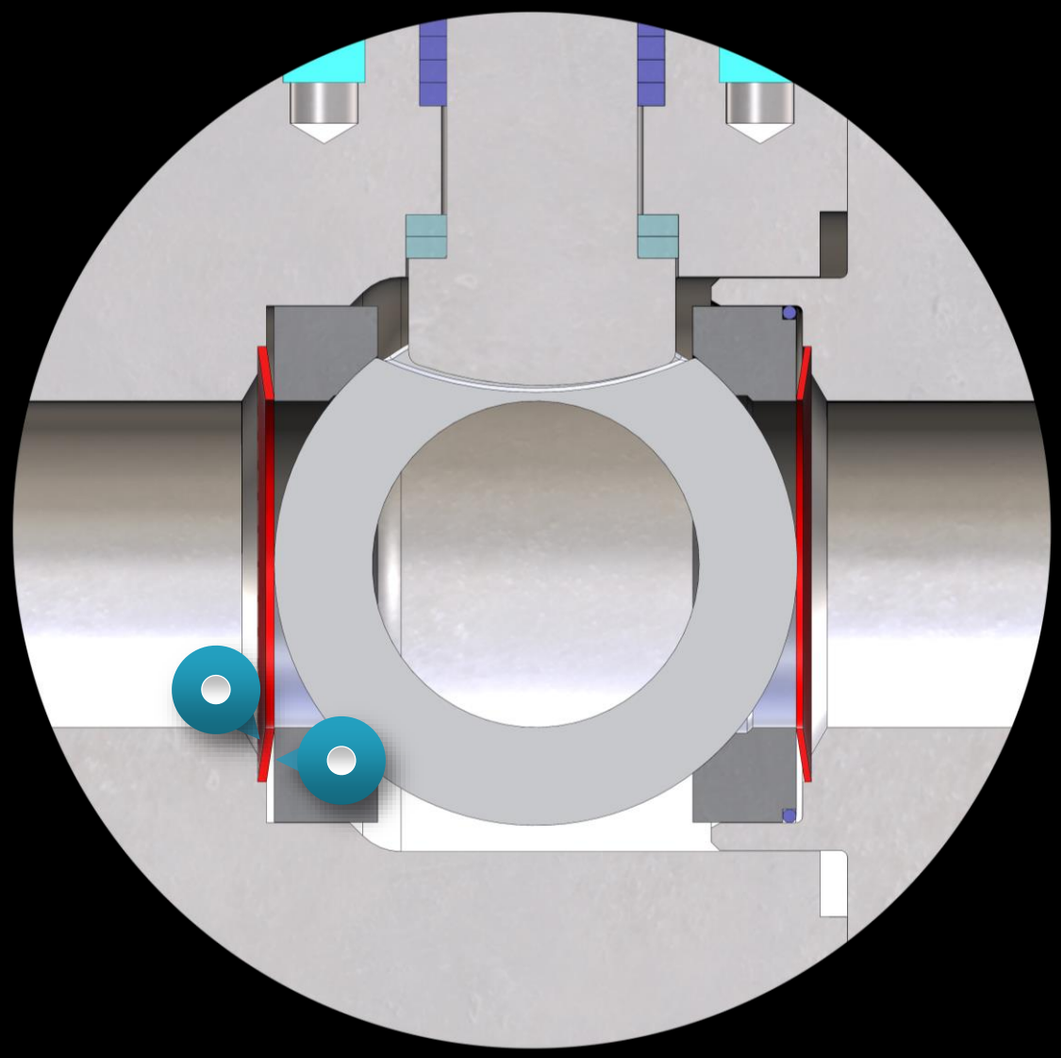

"ALL PLUGGED UP"

COMPETITOR'S SEAT/SPRING DESIGN

Valve locks up

Springs can't "give" when ball needs to move back (as the valve opens)

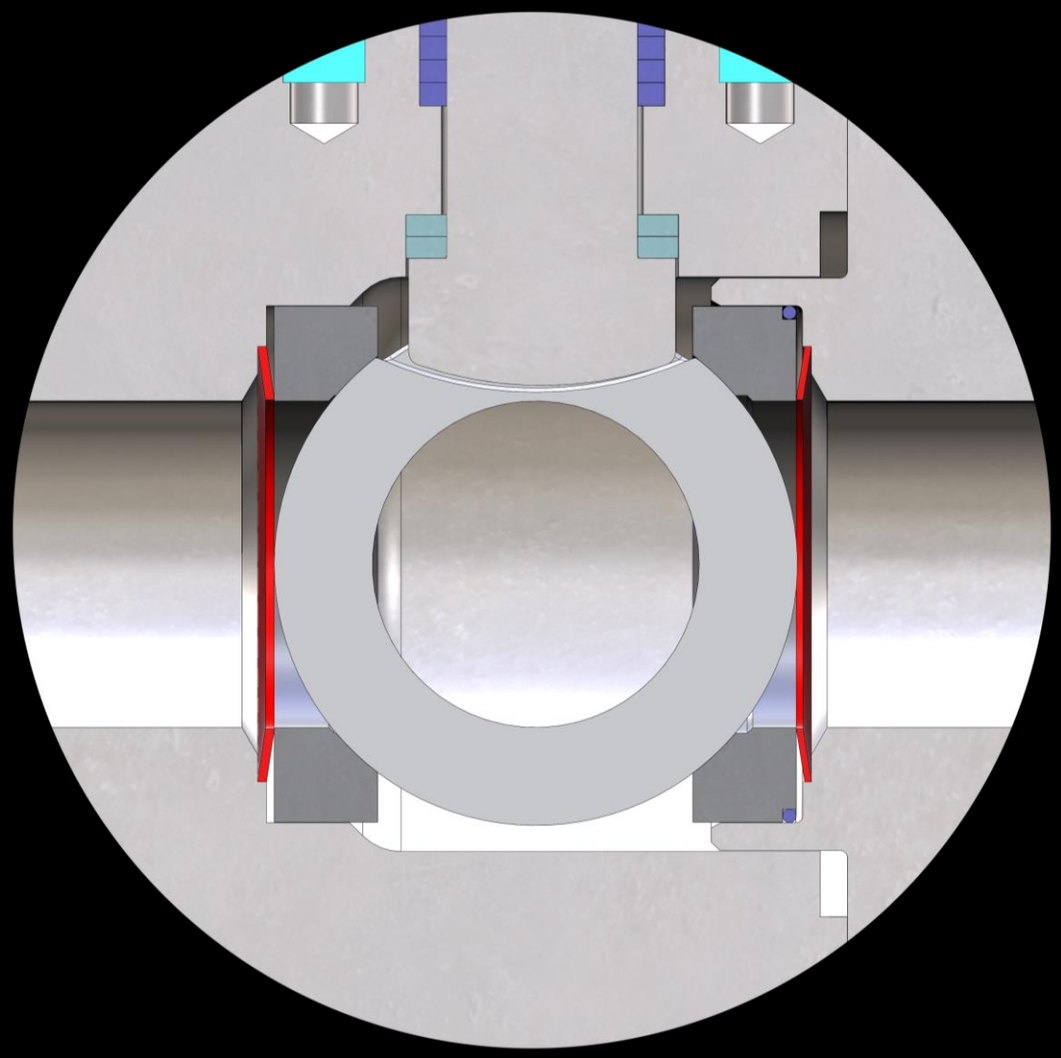

"ALL PLUGGED UP"

GOSCO'S SEAT/SPRING DESIGN

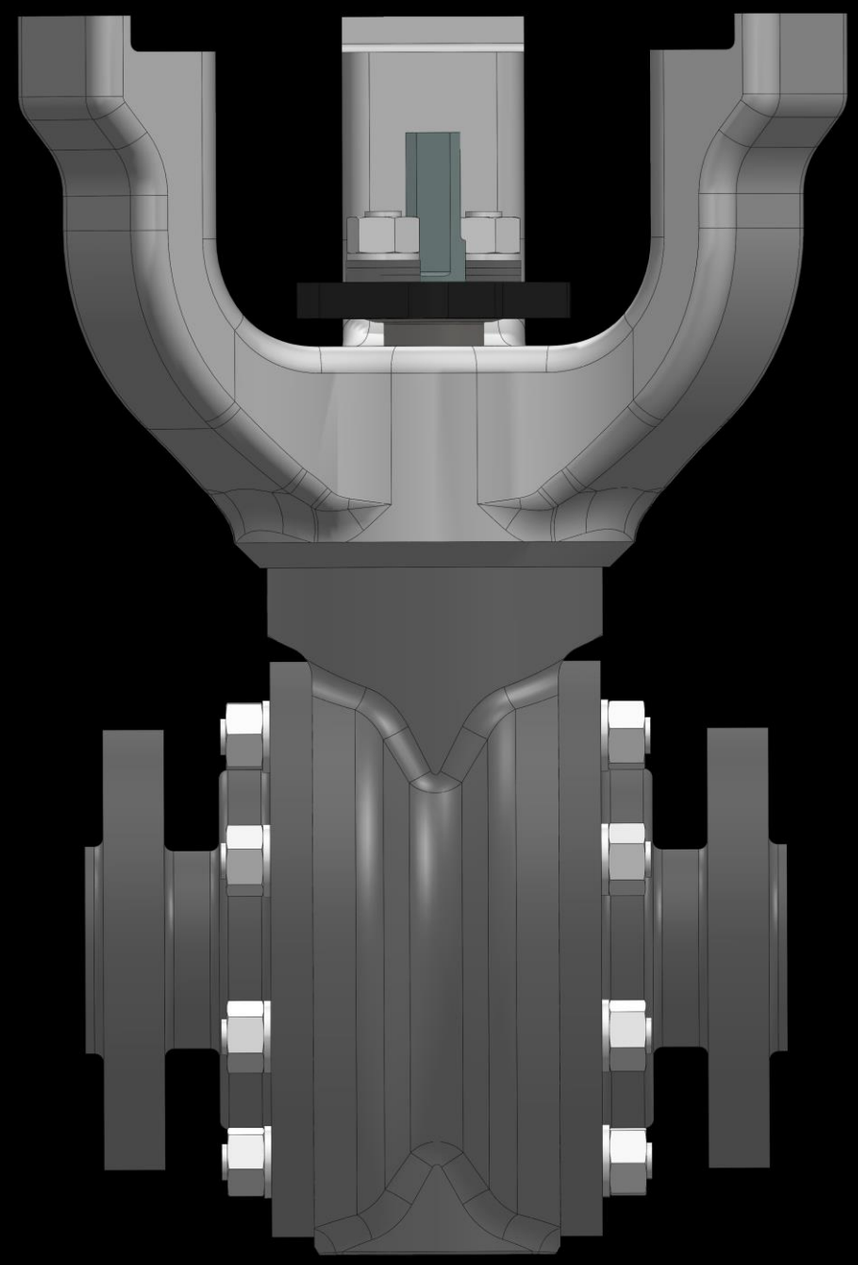

M-CLASS

CUSTOM METAL SEATED

"FREE FALL"

gosco VALVES

GOSCO'S SEAT/SPRING DESIGN

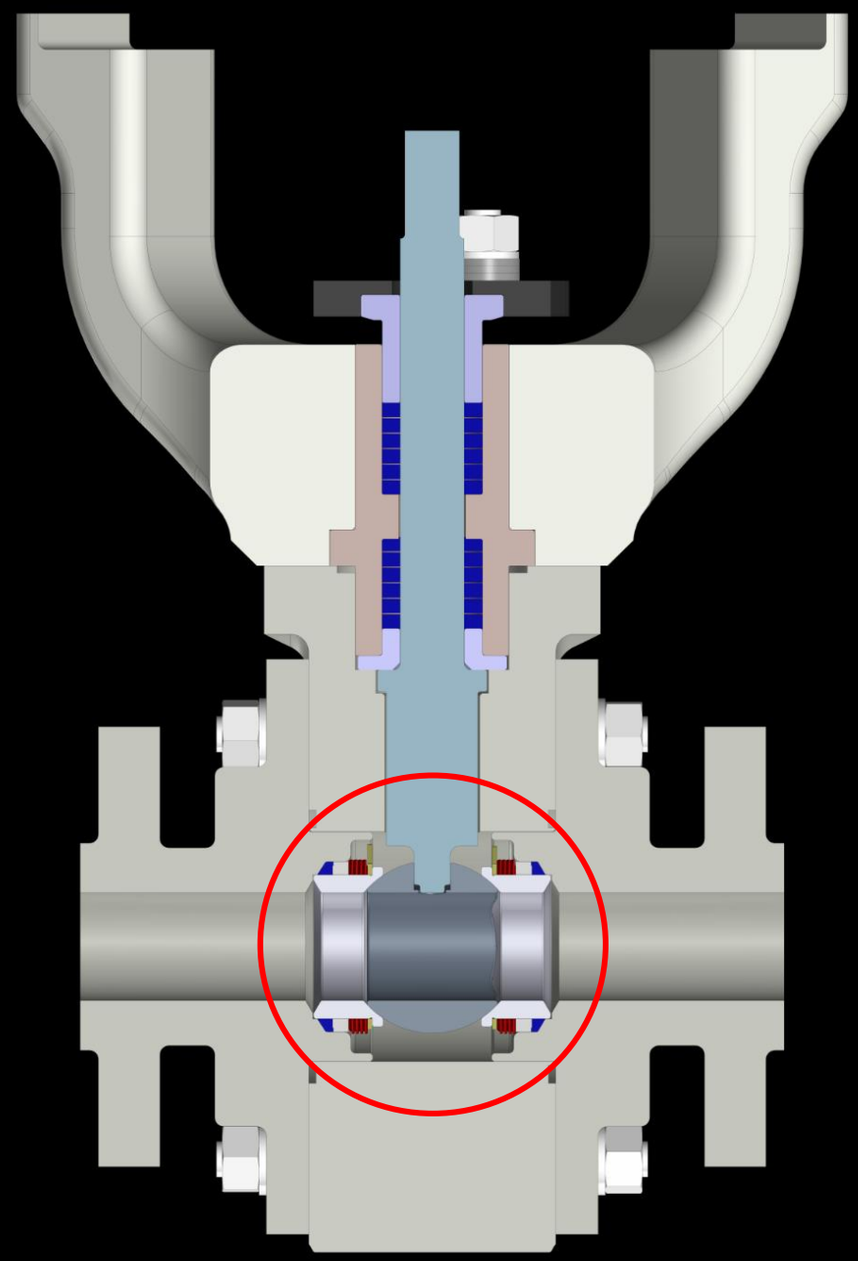

M-CLASS

CUSTOM METAL SEATED

"FREE FALL"

gosco VALVES

GOSCO'S SEAT/SPRING DESIGN

Graphite wedge seal and
compression ring
(Secured in the valve flange)

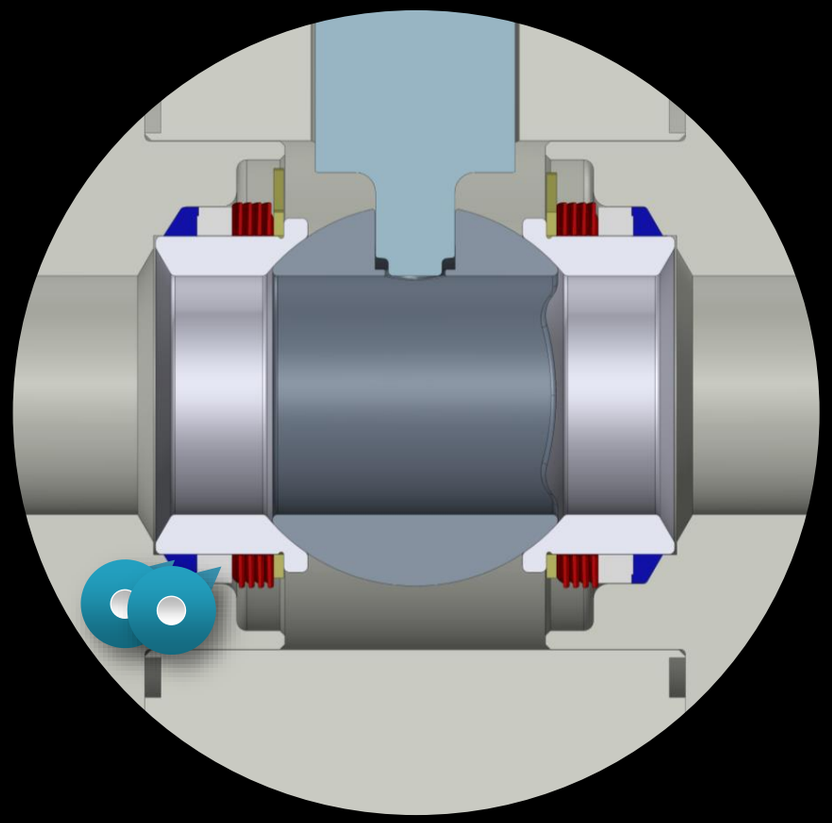

GOSCO'S SEAT/SPRING DESIGN

Nested wave spring
(Downstream of wedge seal)

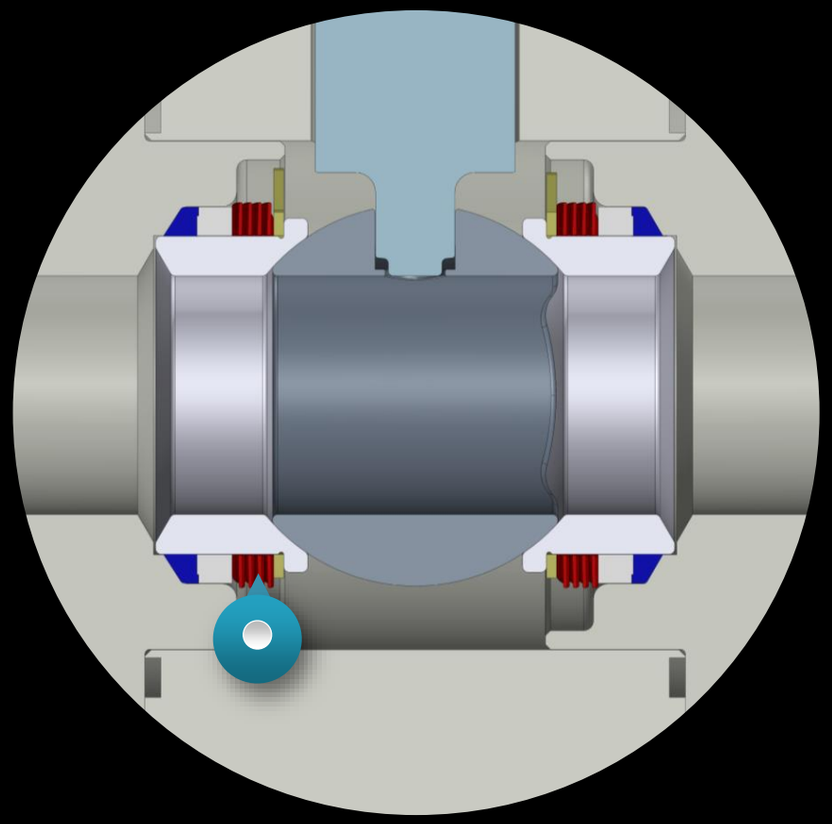

GOSCO'S SEAT/SPRING DESIGN

Spring is completely open to media

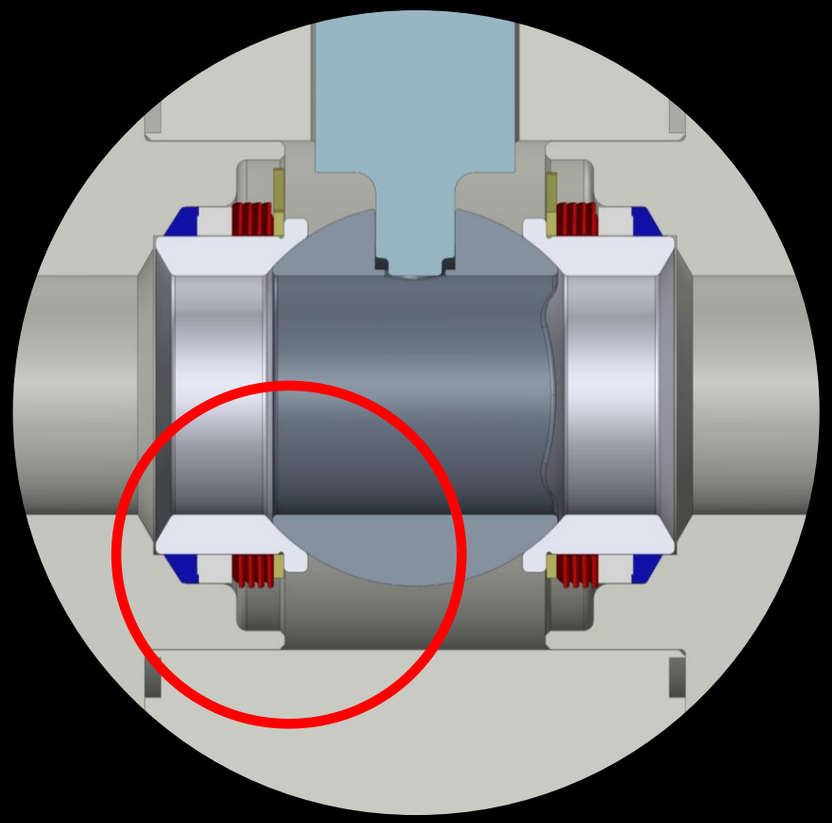

"FREE FALL"

GOSCO'S SEAT/SPRING DESIGN

Media can get in to the spring cavity, but also escapes just as easily

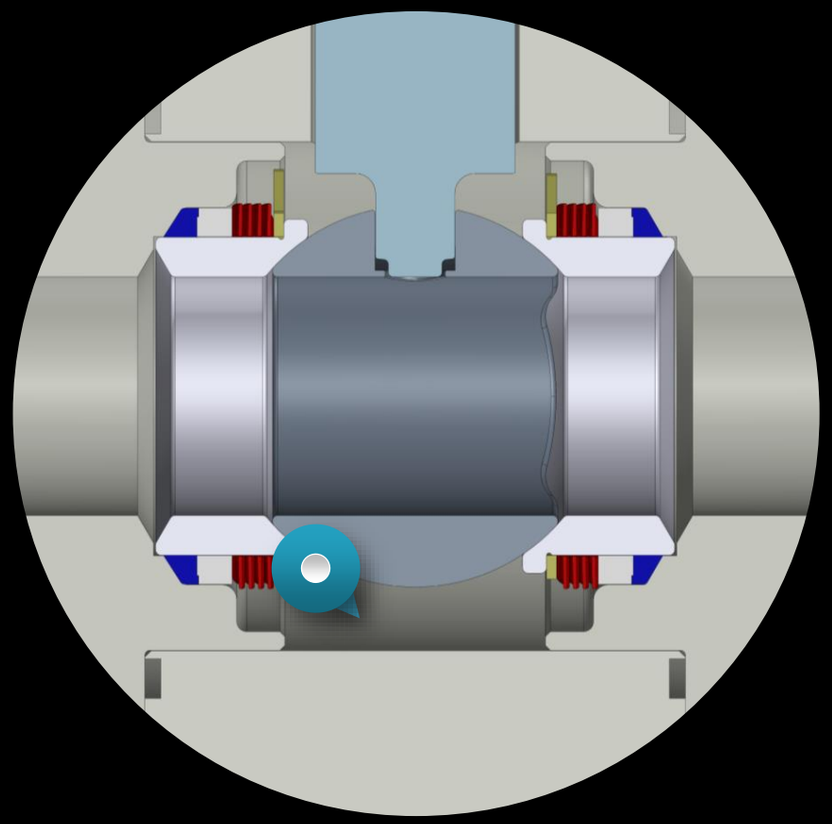

"FREE FALL"

GOSCO'S SEAT/SPRING DESIGN

Line pressure assists to pull media out of the spring cavity

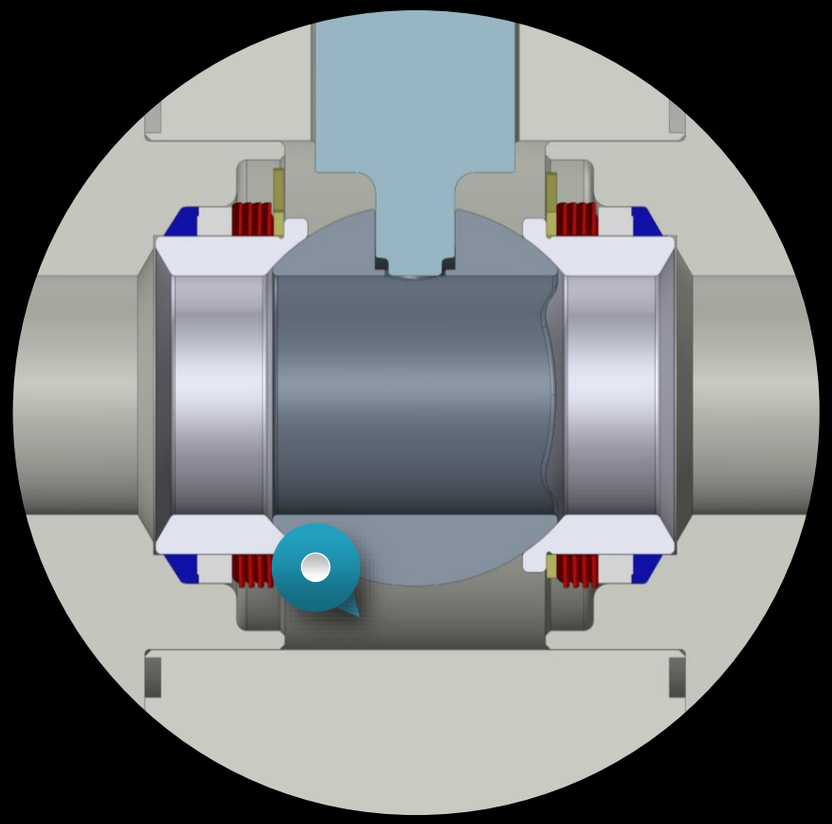

"FREE FALL"

GOSCO'S SEAT/SPRING DESIGN

Line pressure assists to pull media out of the spring cavity

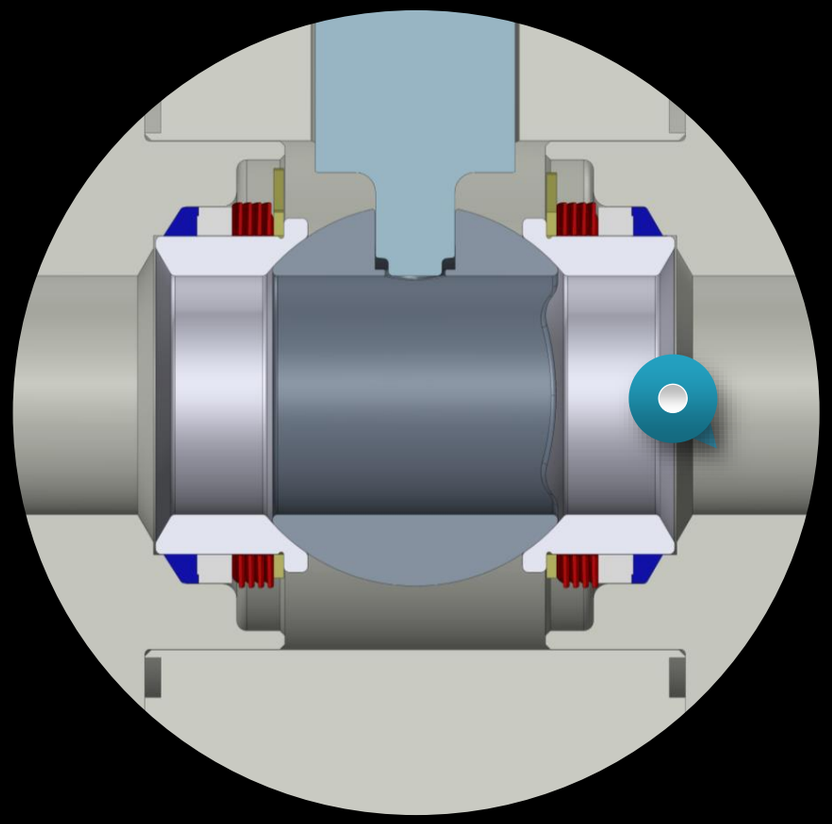

"FREE FALL"

GOSCO'S SEATS

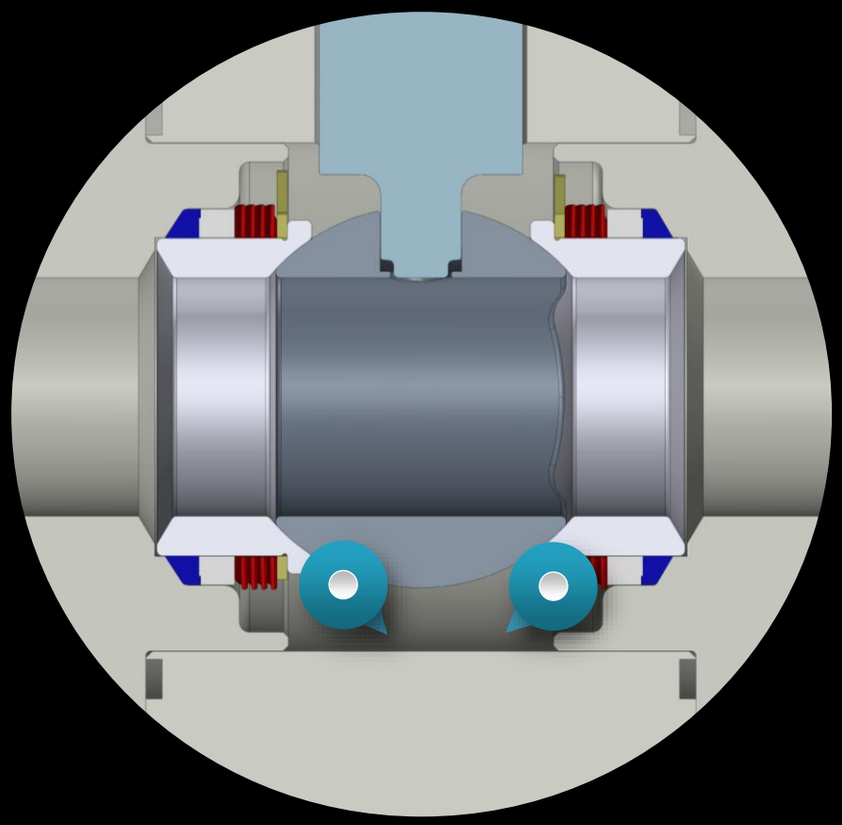

Media flows freely around the springs

"FREE FALL"

GOSCO'S SEATS

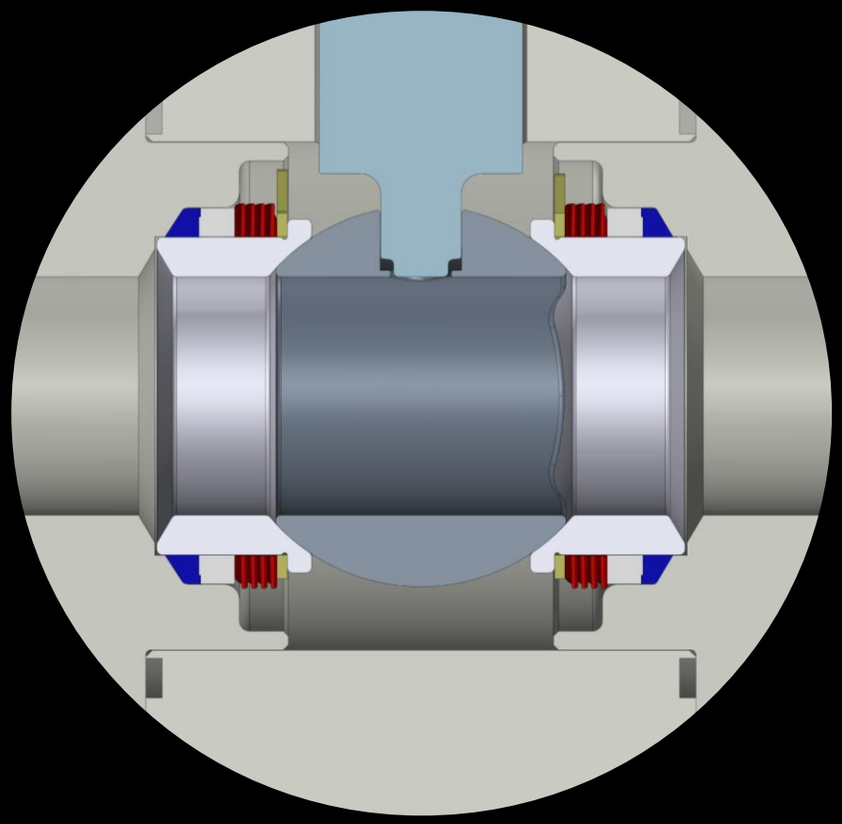

Media flows freely around the springs

"FREE FALL"

COMPETITOR'S SEATS

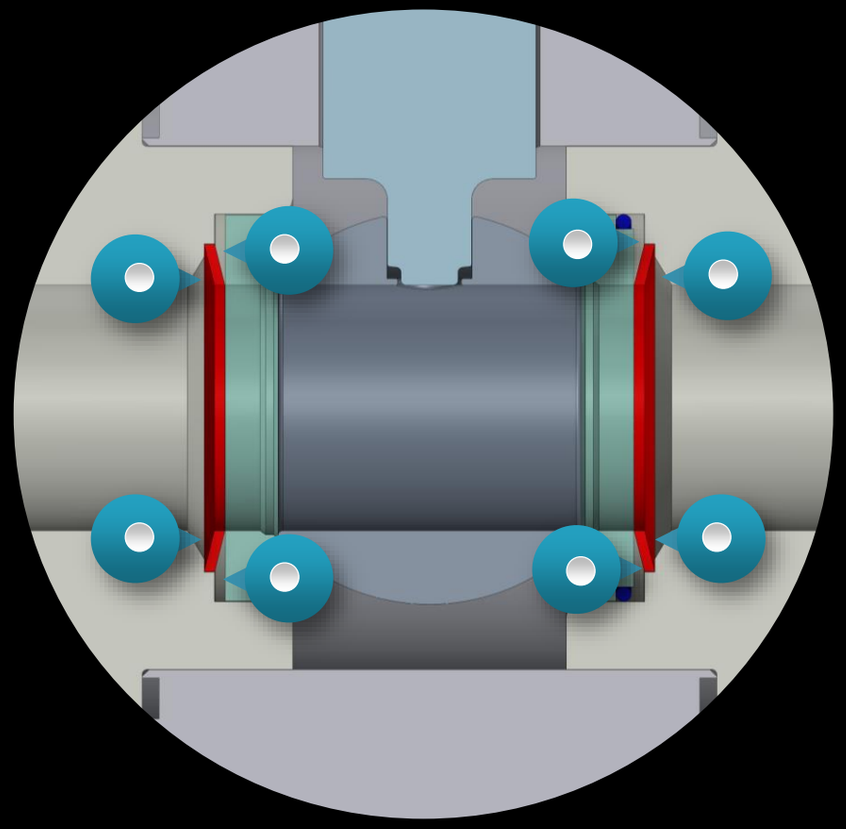

Media compacts around the Bellevilles

"ALL PLUGGED UP"

BALL DESIGN

M-CLASS

CUSTOM METAL SEATED

“SLOW POKE”

gosco VALVES

GOSCO'S ARCUATE CUT BALL

Specific profile is cut on the ball to reduce velocities

GOSCO'S ARCUATE CUT BALL

Arcuate cut is then hardened in the boronizing process

GOSCO'S ARCUATE CUT BALL

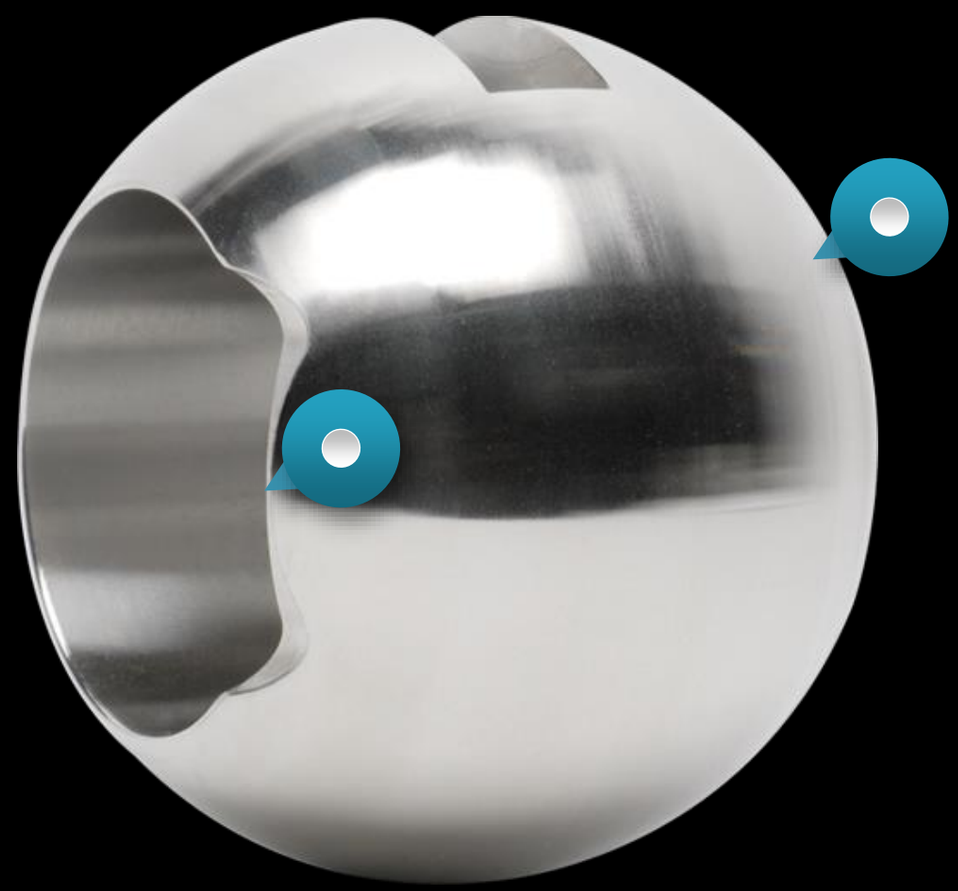

Both sides of ball have an arcuate cut (not visible in image)

STANDARD BALL vs ARCUATE CUT

Illustration below shows a ball at 10% open.

STANDARD BALL (Competition)

Small opening

High velocities

Trim damage

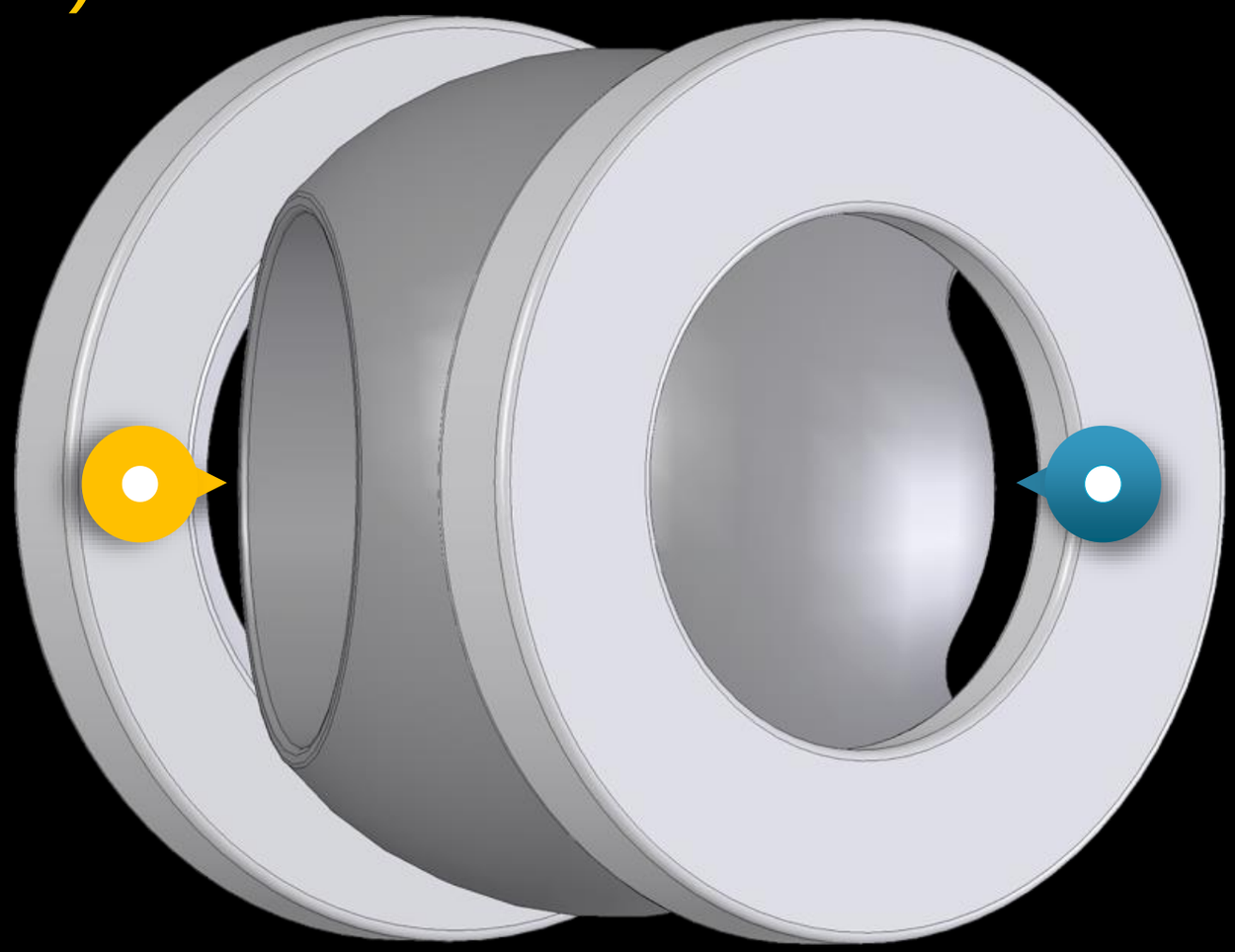

ARCUATE CUT BALL (Gosco Valves)

3 times larger opening

Velocities reduced by 2/3

Less trim damage
(Flow is spread out)

COMPUTATIONAL FLUID DYNAMICS ANALYSIS (CFD)

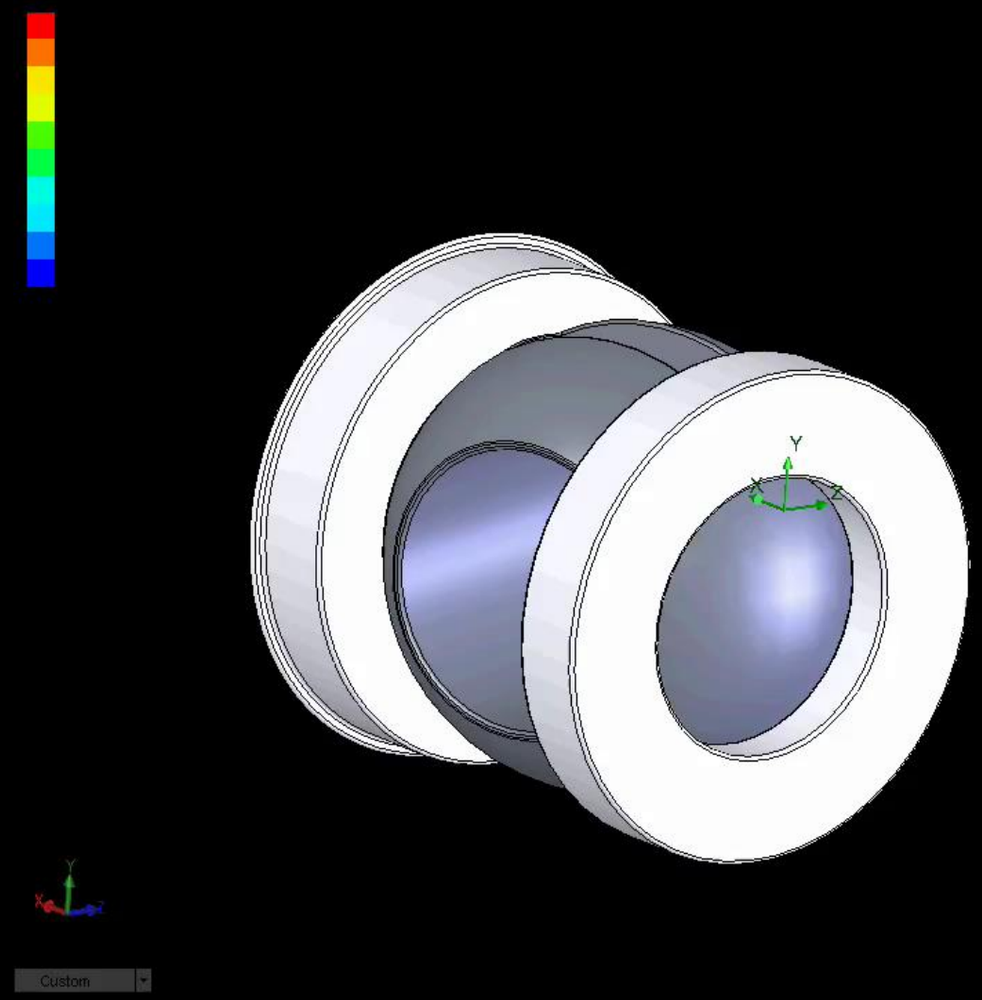

STANDARD BALL

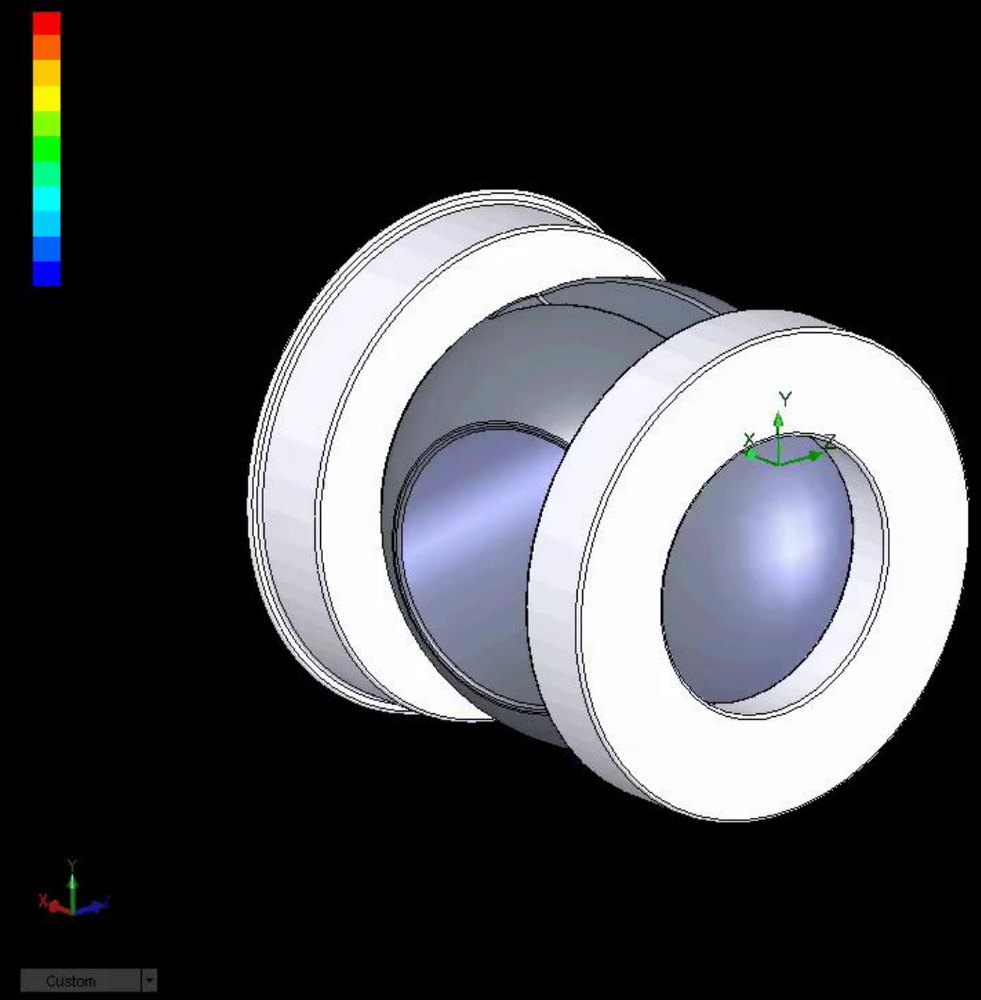

ARCUATE CUT BALL

M-CLASS

CUSTOM METAL SEATED

“SLOW POKE”

gosco VALVES

GOSCO VARI-V BALLS

M-CLASS

CUSTOM METAL SEATED

"CONTROL FREAK"

gosco VALVES

STANDARD BALL

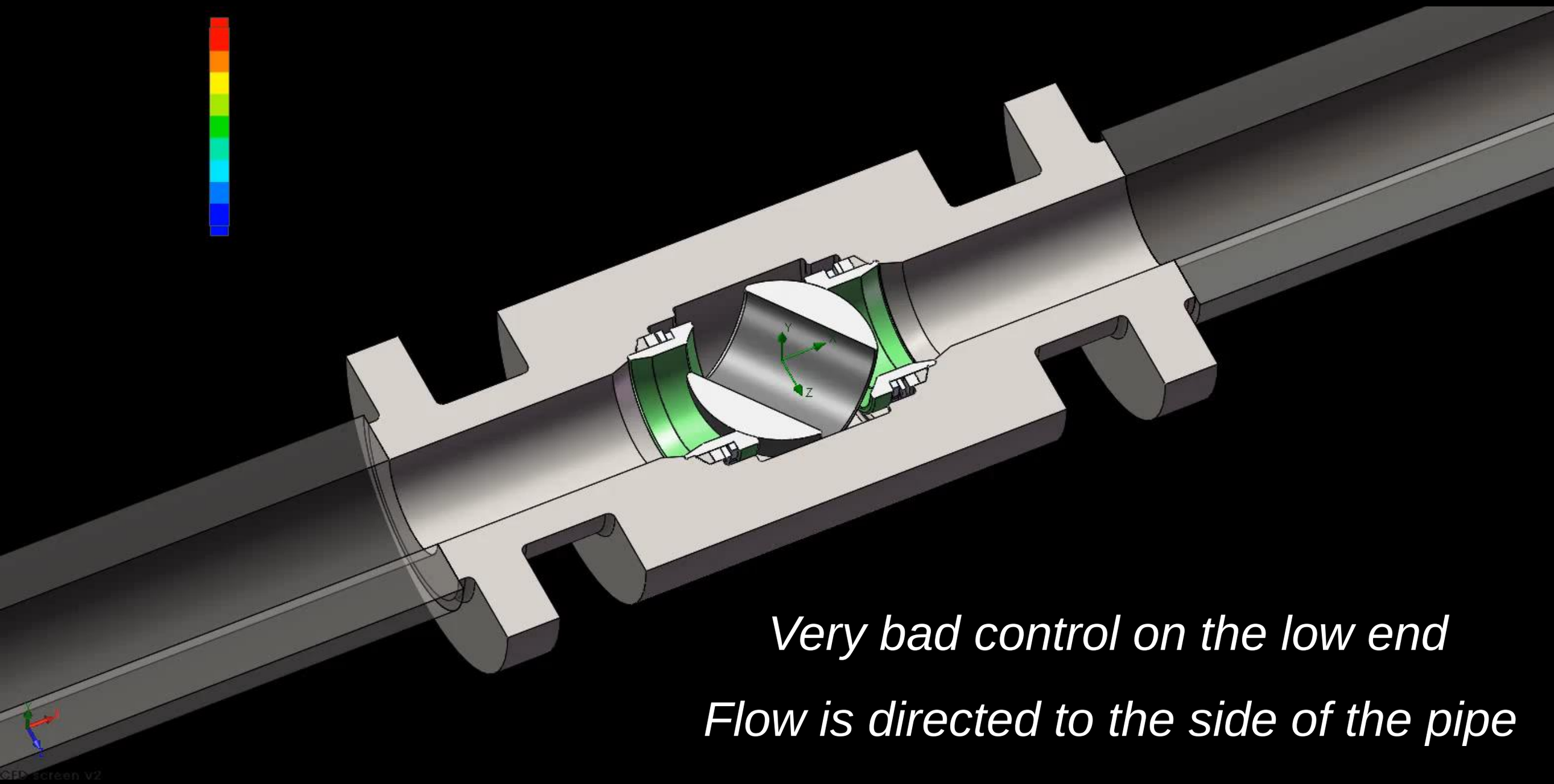

Very bad control on the low end

Flow is directed to the side of the pipe

GOSCO VARI-V BALL

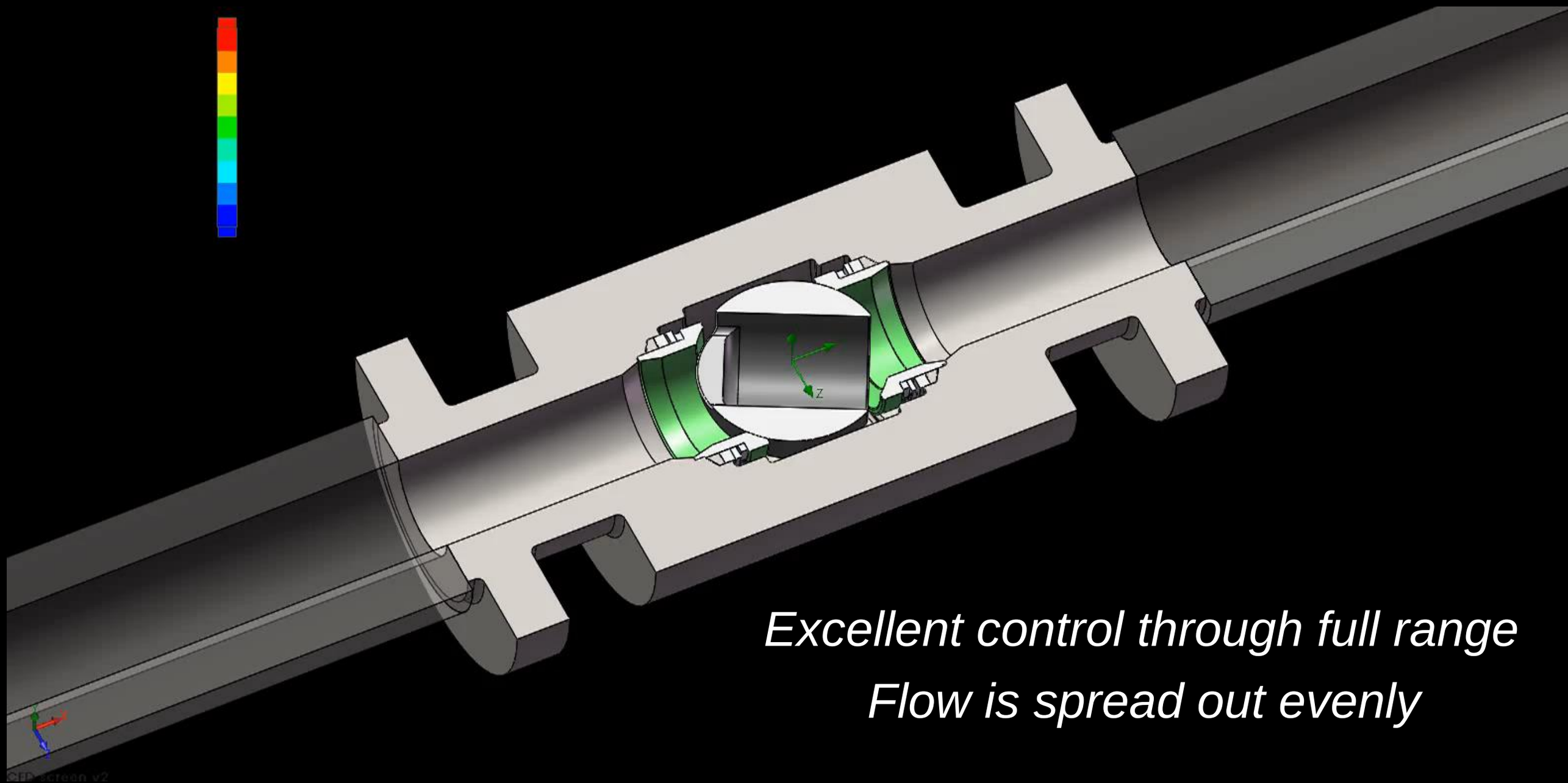

Excellent control through full range

Flow is spread out evenly

M-CLASS

CUSTOM METAL SEATED

"CONTROL FREAK"

gosco VALVES

CUSTOM VARI-V BALLS

GOSCO can custom design any profile for your application

CUSTOM V-BALL C_V CURVE

Flow requirements for one of our custom V-balls.

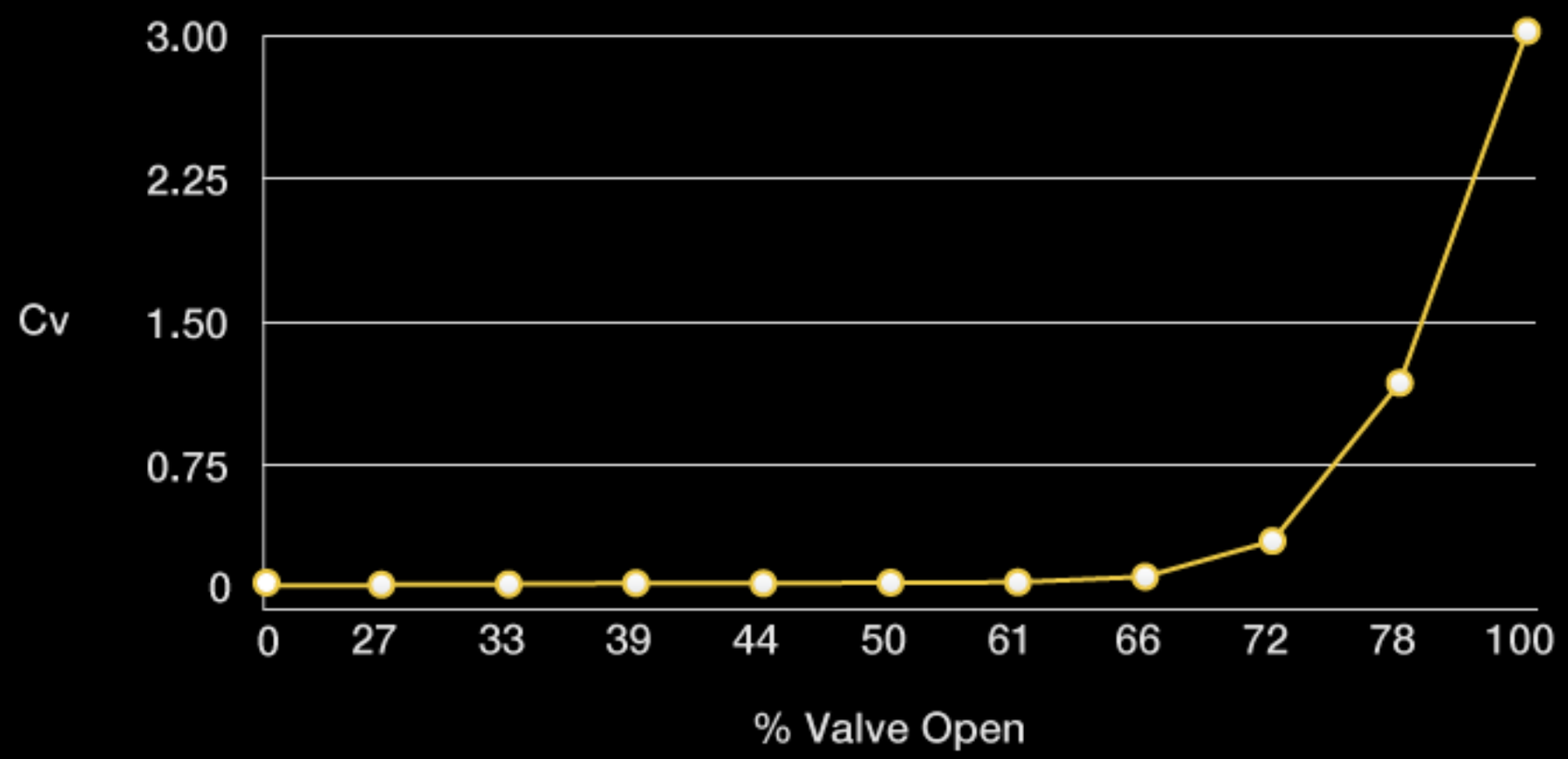

SLOT WIDTH WAS ALMOST AS THIN AS A HUMAN HAIR

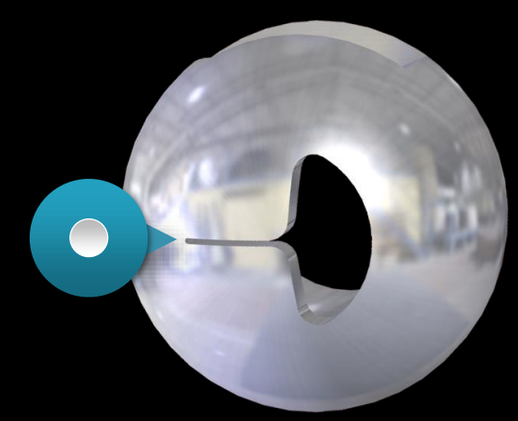

SHAFT PACKING

M-CLASS

CUSTOM METAL SEATED

“THE BUCK STOPS HERE”

gosco VALVES

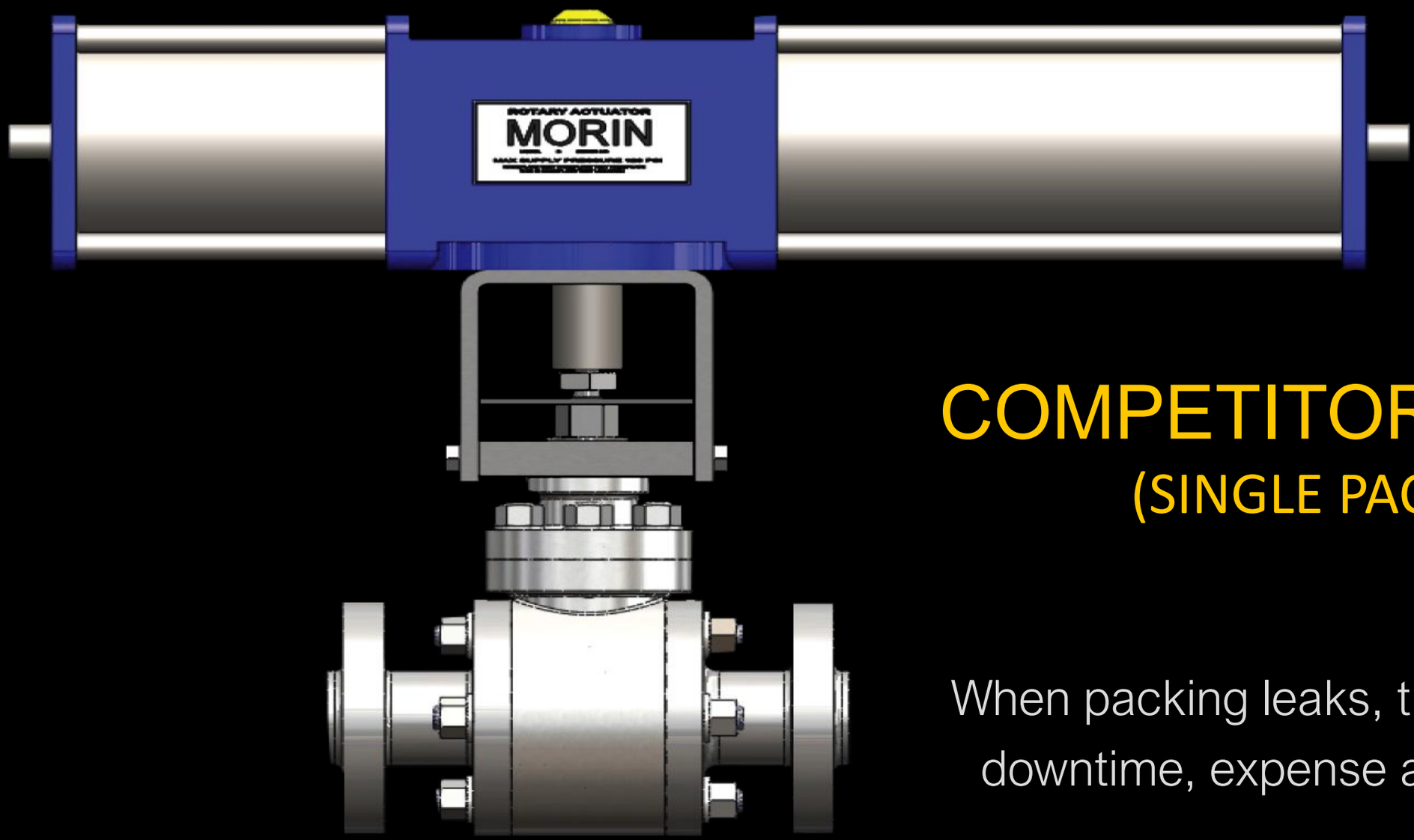

COMPETITOR'S VALVE

(SINGLE PACKING)

When packing leaks, there is risk of downtime, expense and injury

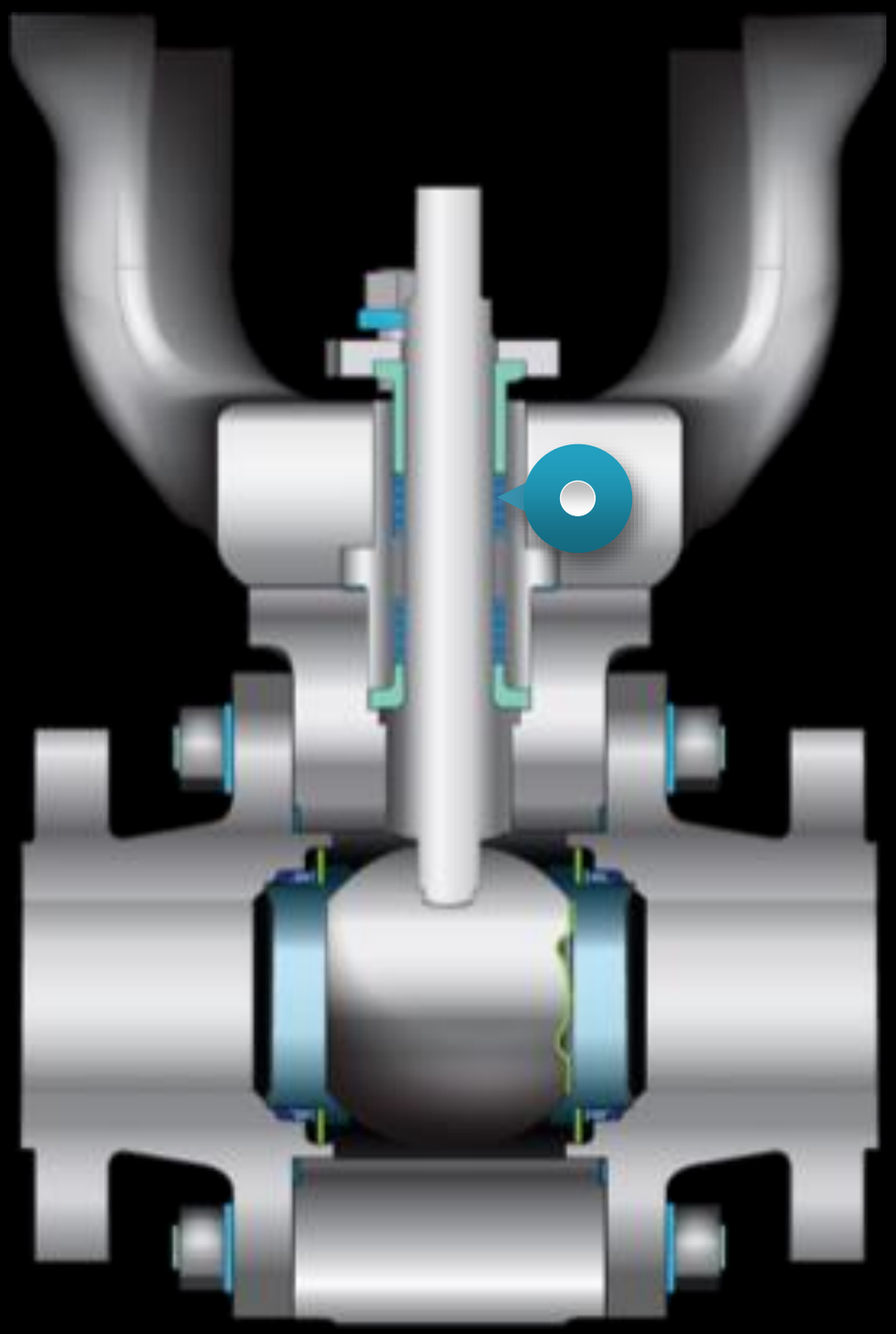

GOSCO'S VALVE
(DUAL PACKING)

Live loaded upper packing

M-CLASS
CUSTOM METAL SEATED

"THE BUCK STOPS HERE"

gosco VALVES

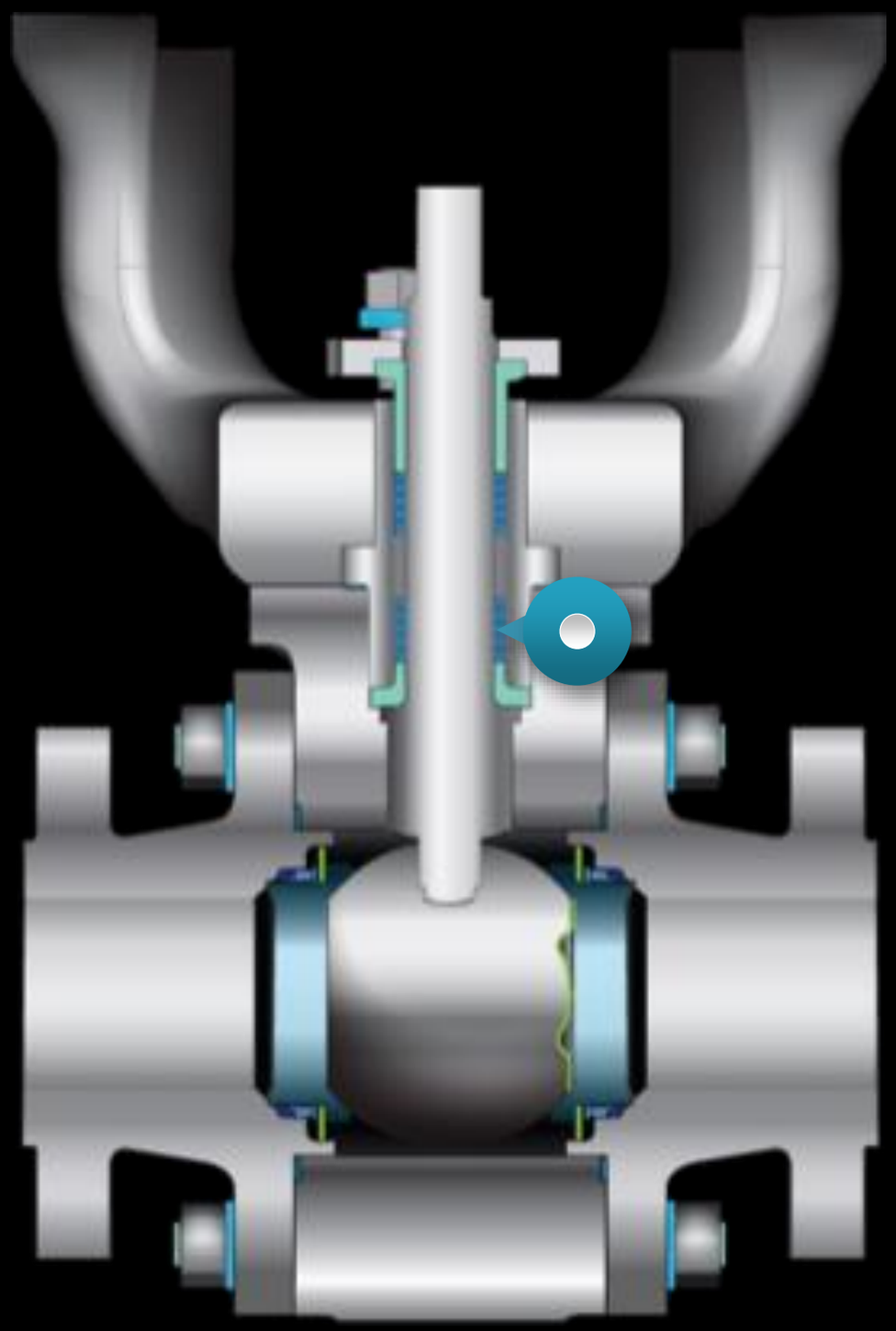

GOSCO'S VALVE
(DUAL PACKING)

Live loaded upper packing
SmartPak™ lower packing

M-CLASS
CUSTOM METAL SEATED

"THE BUCK STOPS HERE"

gosco VALVES

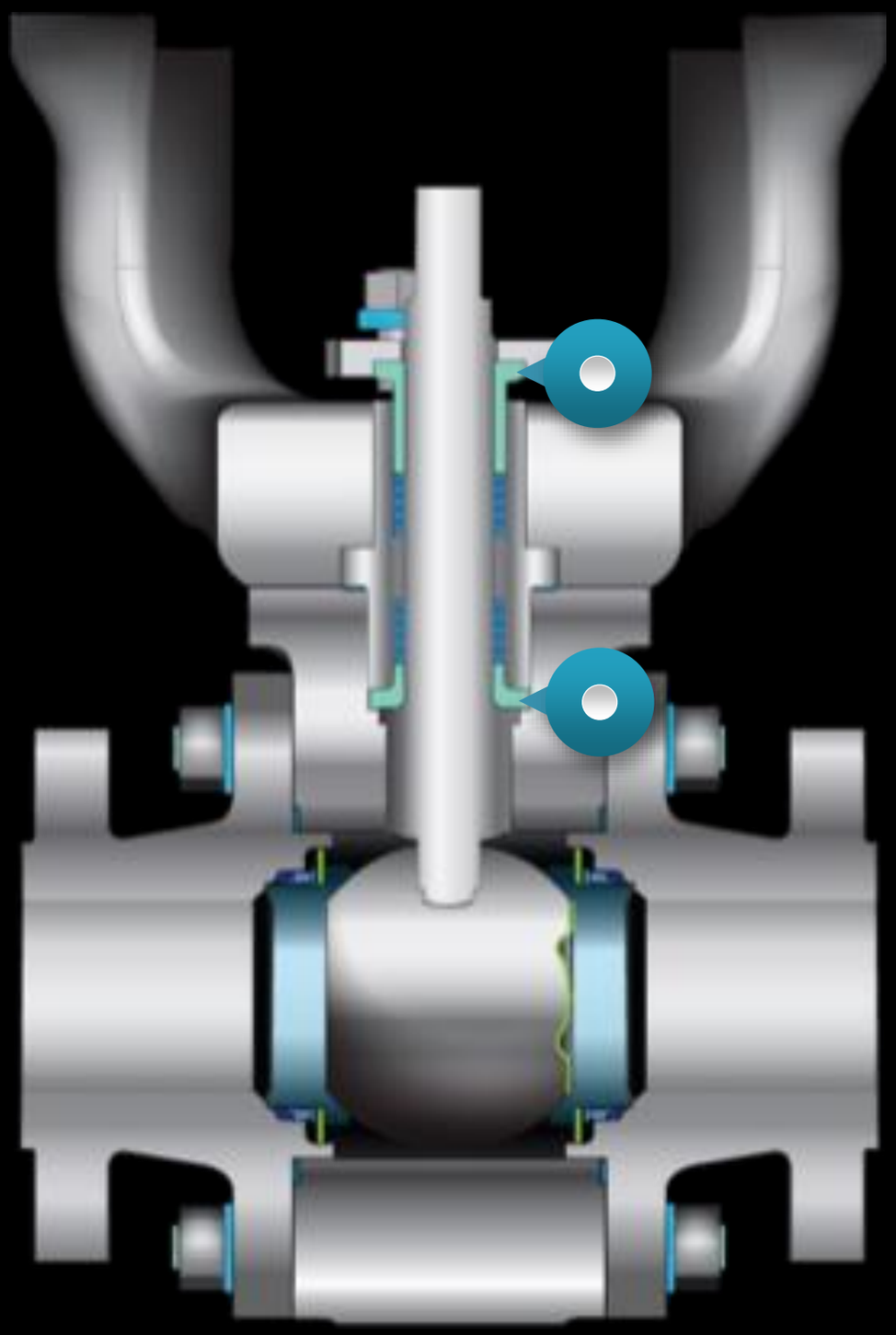

GOSCO'S VALVE
(DUAL PACKING)

Live loaded upper packing
SmartPak™ lower packing
Dual shaft guides

ALLOY OPTIONS

M-CLASS

CUSTOM METAL SEATED

"CHAMELEON"

gosco VALVES

ALLOY OPTIONS

Hastelloy

Incoloy

Inconel

Super Duplex

Alloy 20

Duplex

Titanium

Tantalum

Monel

Carbon Steel

CUSTOMER SPECIFIED

TRULY BI-DIRECTIONAL

M-CLASS

CUSTOM METAL SEATED

"WHAT CAN I SAY"

gosco VALVES

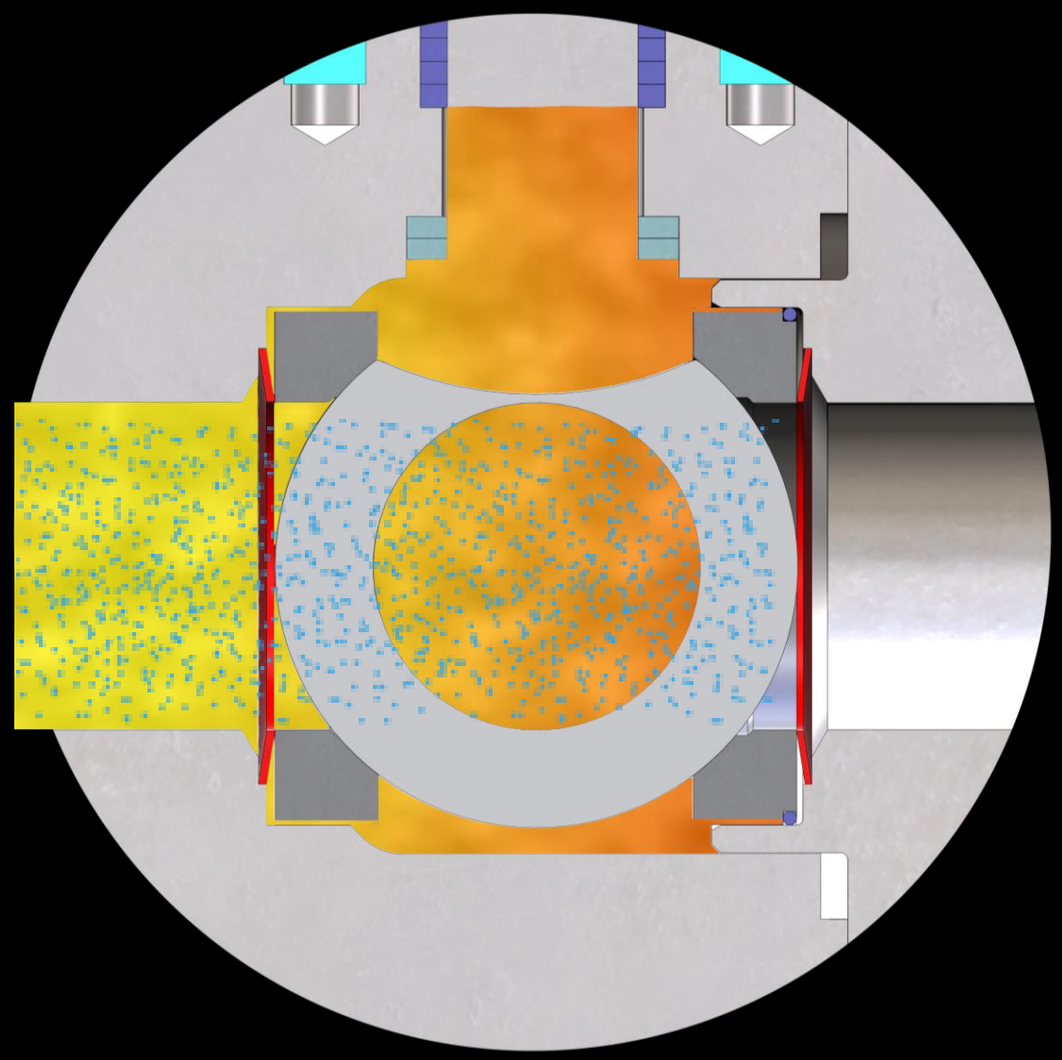

COMPETITOR'S VALVE
(UNI–DIRECTIONAL SEALING)

With upstream flow

"ONE WAY STREET"

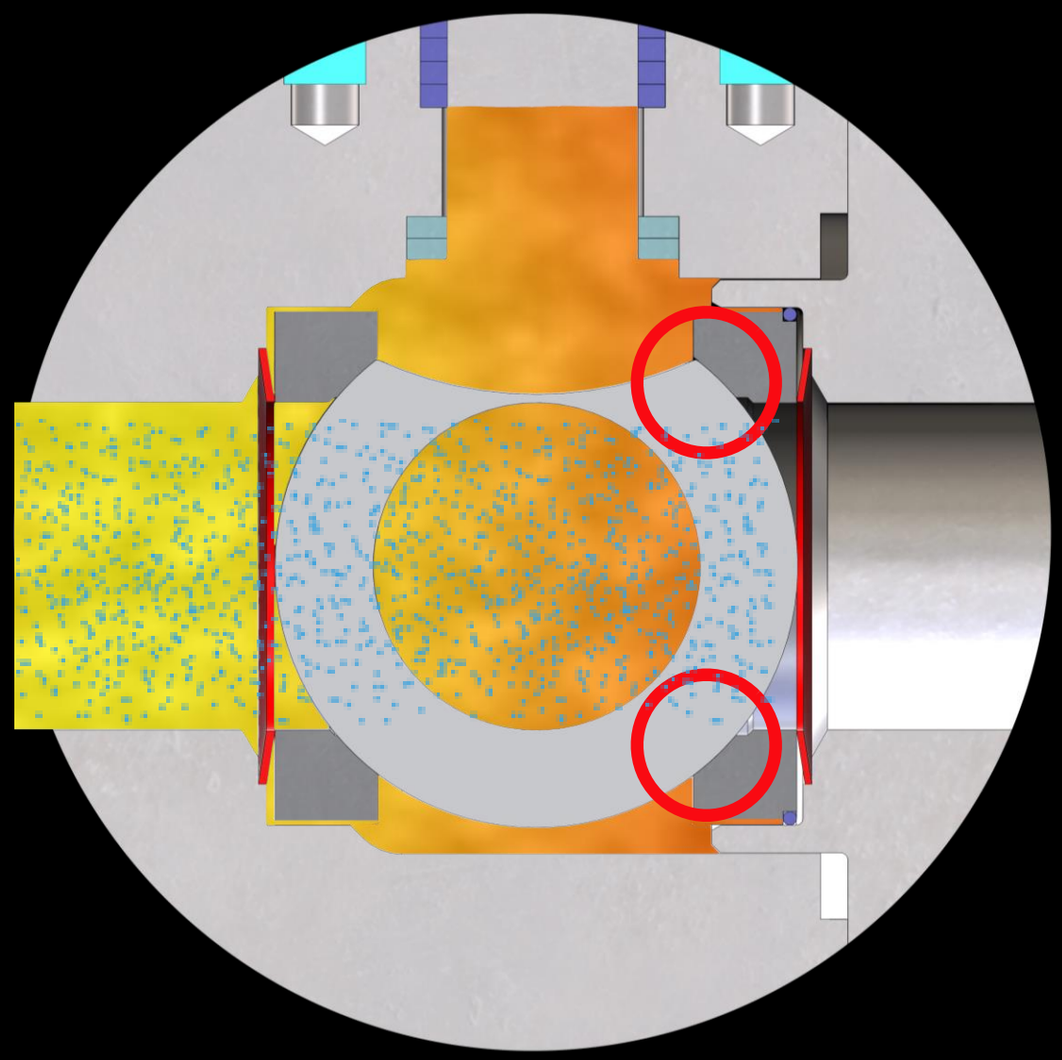

COMPETITOR'S VALVE
(UNI–DIRECTIONAL SEALING)

Seal is created between the downstream seat and ball

"ONE WAY STREET"

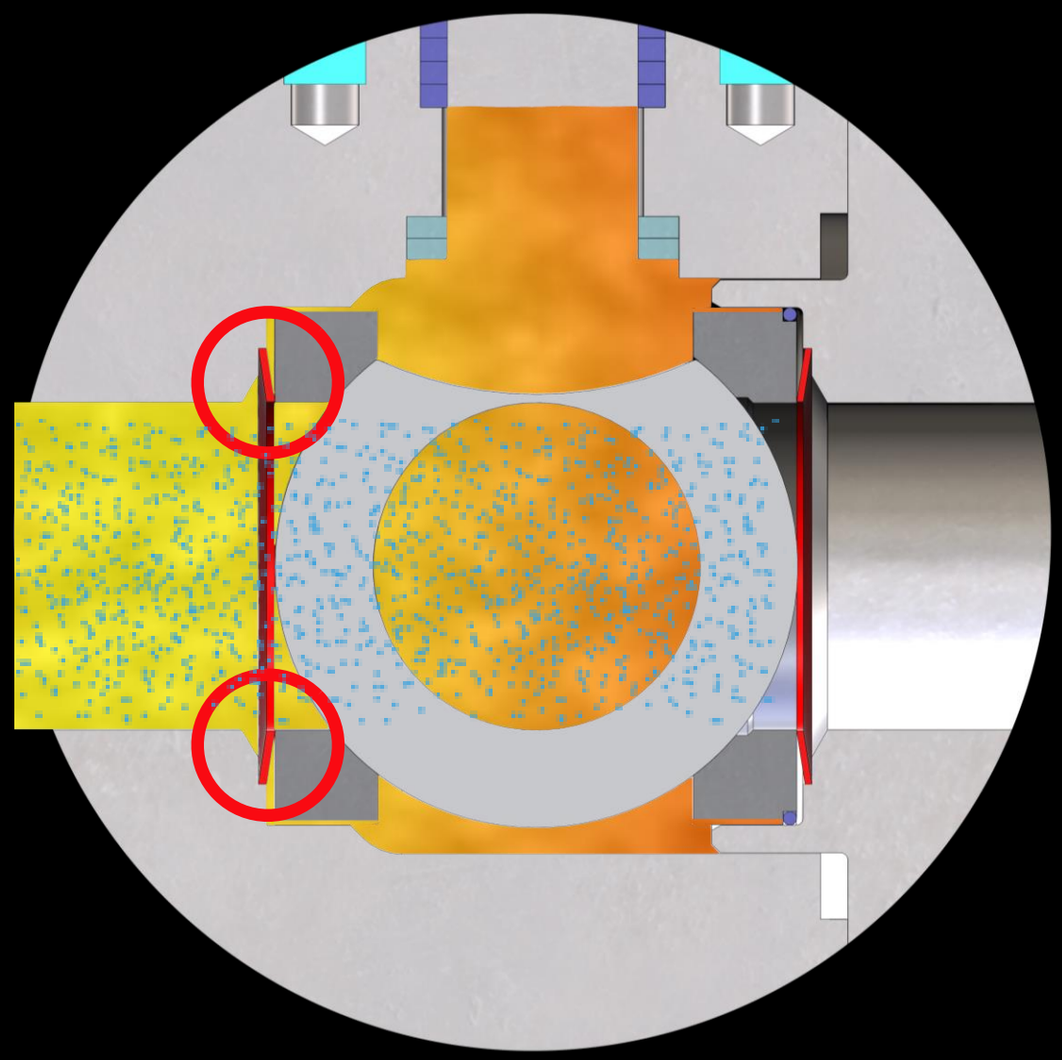

COMPETITOR'S VALVE
(UNI–DIRECTIONAL SEALING)

Spring is still exerting force on the upstream seat

"ONE WAY STREET"

BACK PRESSURE or REVERSE FLOW

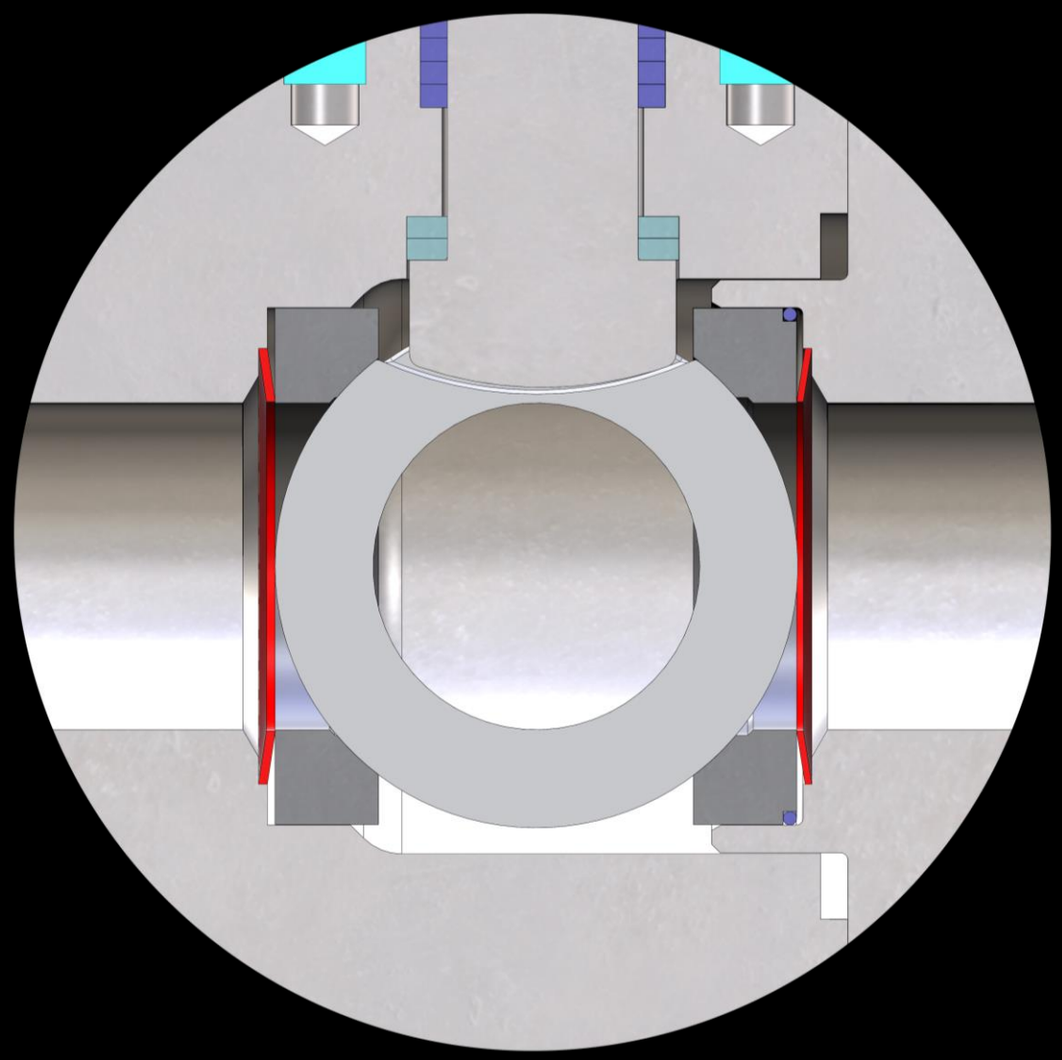

COMPETITOR'S VALVE
(UNI–DIRECTIONAL SEALING)

However, with back-pressure or reverse flow, the valve fails

"ONE WAY STREET"

BACK PRESSURE or REVERSE FLOW

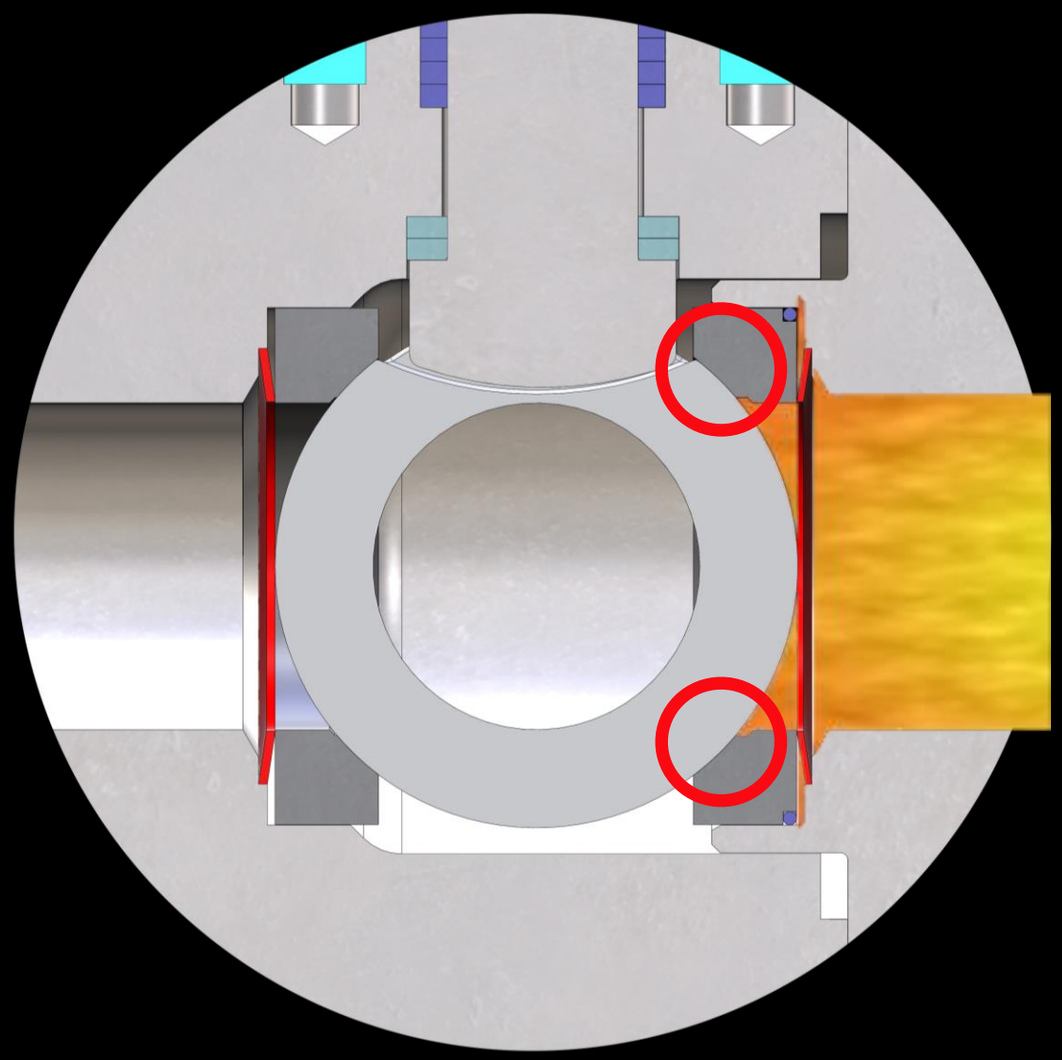

COMPETITOR'S VALVE
(UNI–DIRECTIONAL SEALING)

Back-pressure pushes the ball back

"ONE WAY STREET"

BACK PRESSURE or REVERSE FLOW

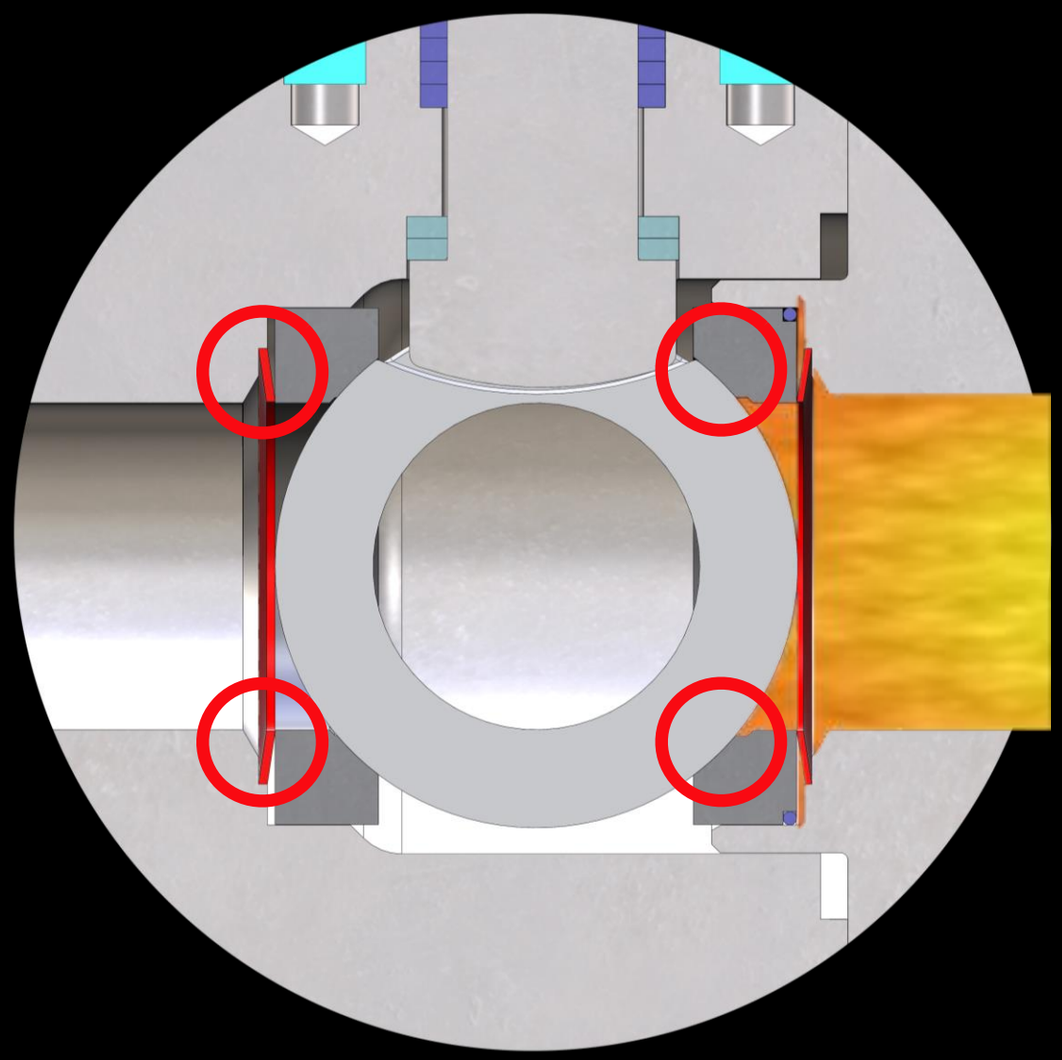

COMPETITOR'S VALVE
(UNI–DIRECTIONAL SEALING)

Back-pressure pushes the ball back and flattens the spring

"ONE WAY STREET"

BACK PRESSURE or REVERSE FLOW

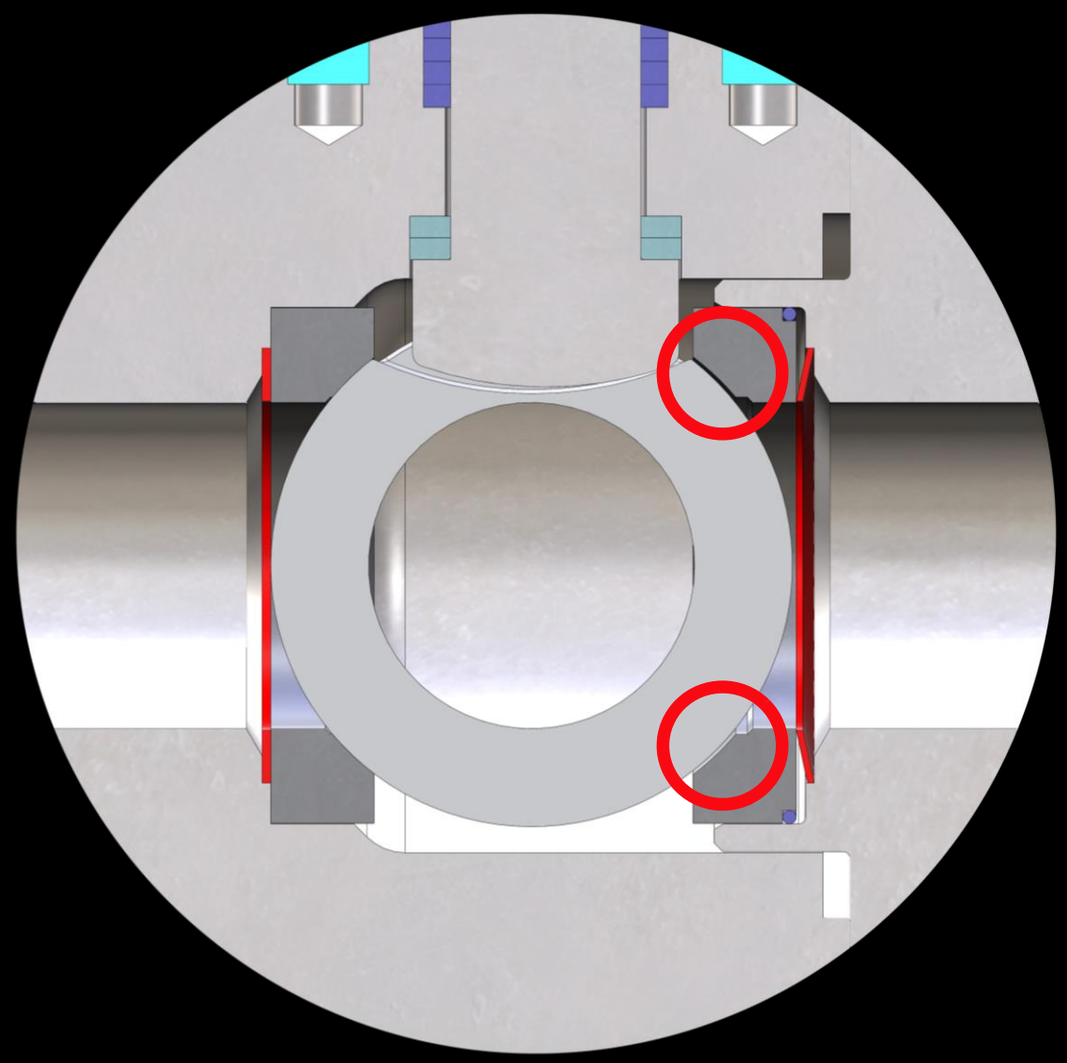

COMPETITOR'S VALVE
(UNI–DIRECTIONAL SEALING)

A gap is created between the ball and seats

"ONE WAY STREET"

BACK PRESSURE or REVERSE FLOW

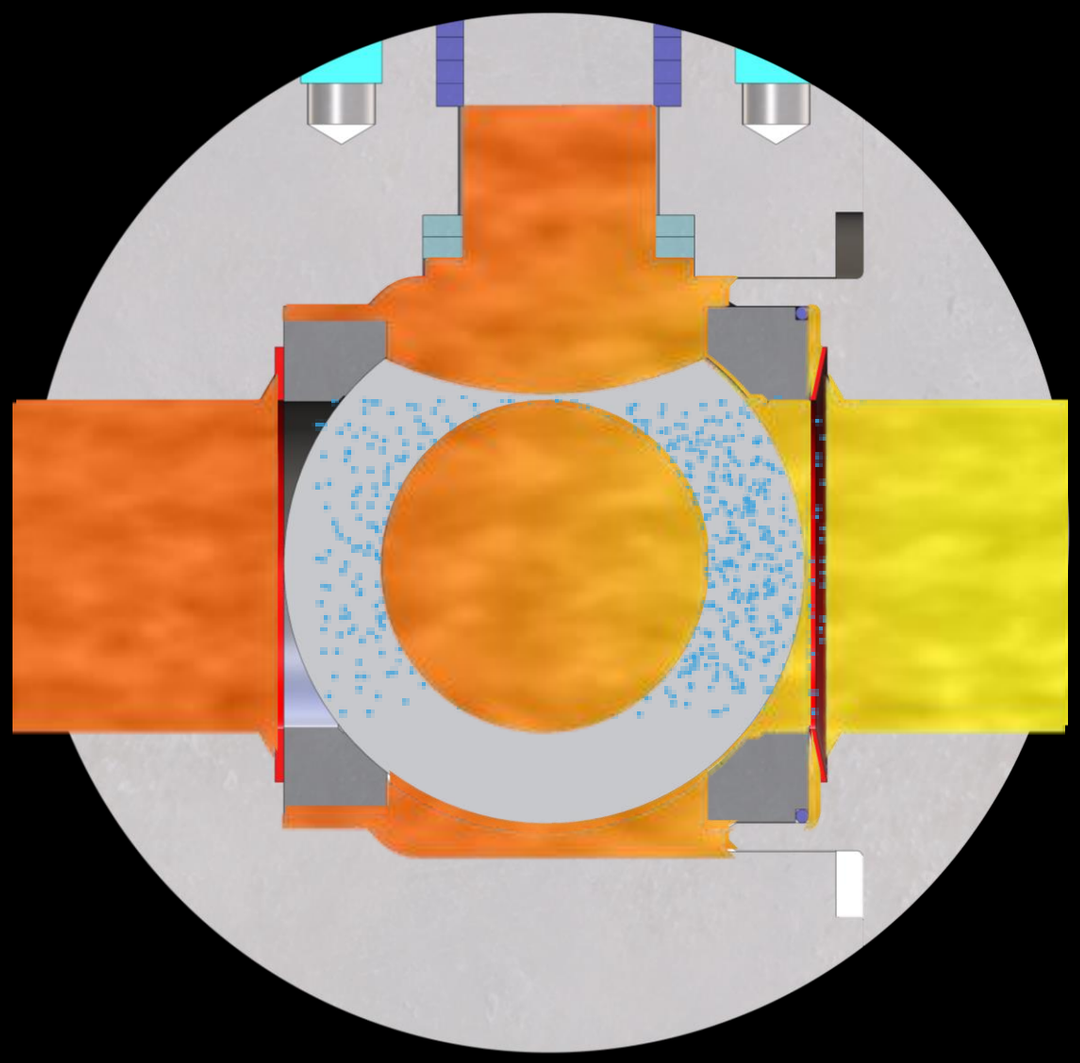

COMPETITOR'S VALVE
(UNI–DIRECTIONAL SEALING)

Valve leaks past the seats

"ONE WAY STREET"

GOSCO'S VALVE
(BI–DIRECTIONAL SEALING)

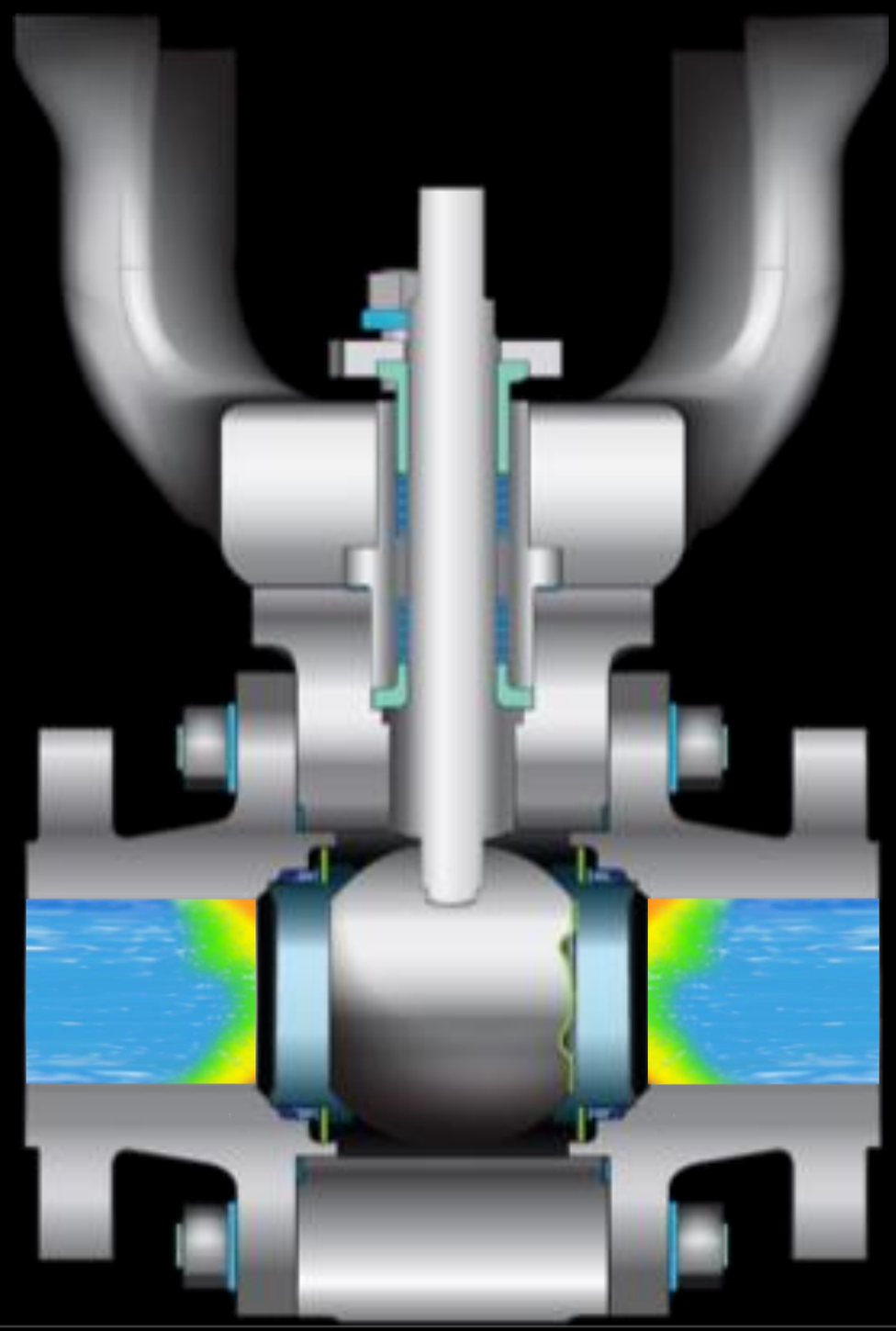

Valve can withstand pressure
from upstream or downstream

M-CLASS
CUSTOM METAL SEATED

"WHAT CAN I SAY?"

gosco VALVES

GOSCO'S VALVE
(BI–DIRECTIONAL SEALING)

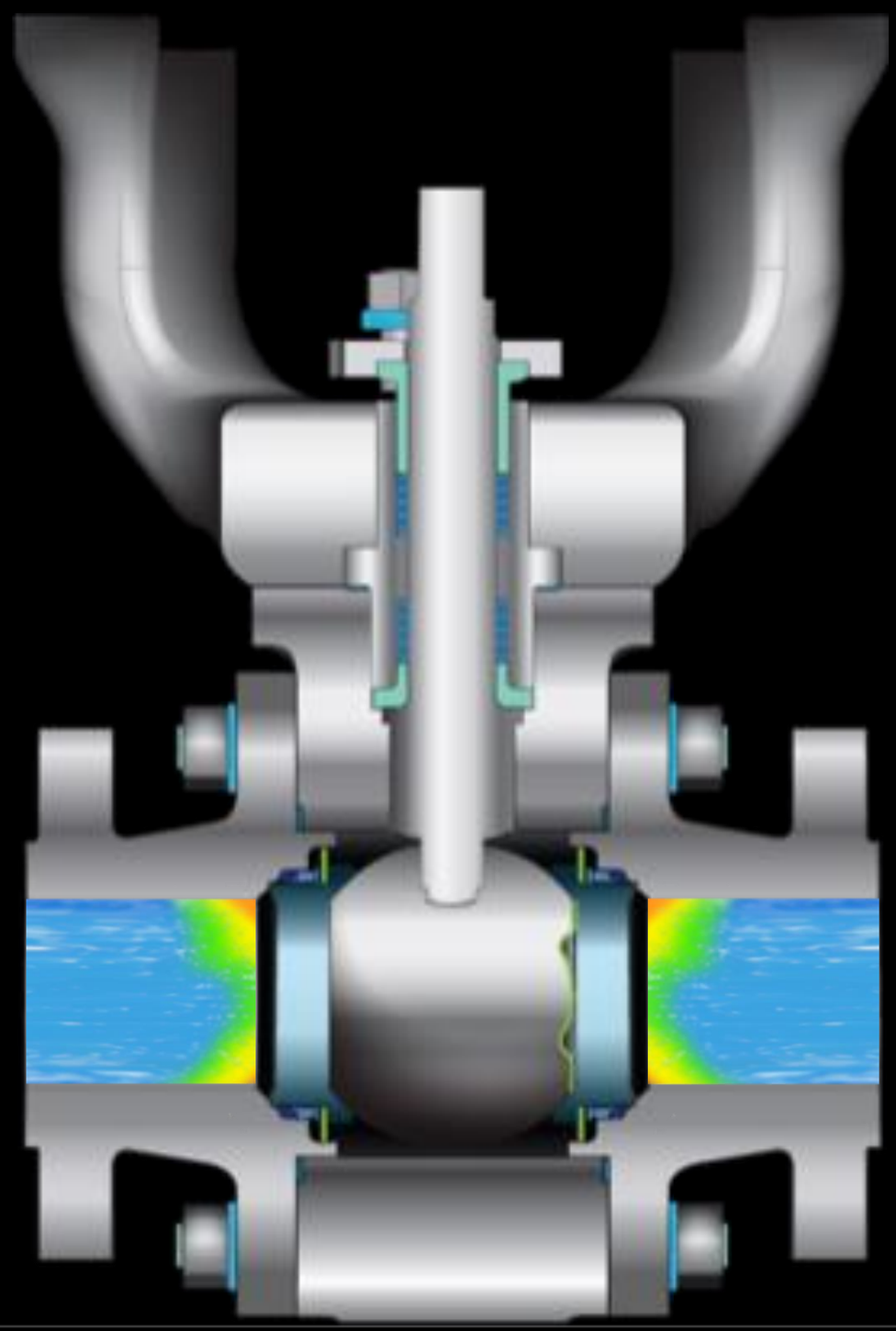

Valve design is completely symmetrical, and seals bubble tight in both directions

Seals with full differential pressure
Seals with 1 psi differential pressure

"WHAT CAN I SAY?"

M-CLASS CONFIGURATIONS

ON/OFF

VARI-V CONTROL

CRYOGENIC

3-WAY DIVERTER/ 3-WAY

DOUBLE ISOLATION & BLEED

CUSTOM

SATISFIED CUSTOMERS

SUNCOR ENERGY

OPTI CANADA INC.

noranda

EXXON

nexen

DOW

ConocoPhillips

中国石化 SINOPEC

GE

Chevron Phillips Chemical Company

JIM BEAM

NASA

DUPONT

The miracles of science

SUNCOR ENERGY

Size & Location: 8” 150# control valves in the Alberta Oil Sands

Description: Used on quenched desand water to desand tank

Process Conditions: Exposure to high level of solids at high velocity (85˚C/185˚F, 16 bar/235 psi with a 13 bar/191 psi drop)

Success Story: We were chosen because we could characterize our Vari-V profile to direct the process flow down to the centre of the pipeline. This reduced valve wear and pipeline wear.

ConocoPhillips

Size & Location: 1” to 6” 600# valves in U.S.A., and China

Description: Installed on the lockhopper in refineries on a sorption-based technology that removes sulfur from FCC gasoline with minimal octane loss

Process Conditions: Extremely abrasive application at 538˚C/1000˚F, 69 bar/1000 psi

Success Story: ConocoPhilips started up their “SZorb” unit in 2005. Mogas valves were installed on every sorbent position. Last year, ConocoPhilips replaced every single Mogas valve with a GOSCO valve

DUPONT

Size & Location: 1000+, 1/2” to 4” 150# valves installed in U.S.A.

Description: Used in various processes in a chemical plant (Kevlar, Mylar etc)

Process Conditions: Mostly ambient temperatures, but extremely corrosive applications ranging from sulphuric acid (Alloy 20 body and trim) to other corrosive applications (chloroform, DMAC, ICL, MPD)

Success Story: To date we have $2,000,000 worth of valves in their plants and there has never been a failure.

Dow

Size & Location: 1000+, 1/2” to 8” valves installed in U.S.A.

Description: Used in highly severe and corrosive polysilicon applications at one of Dow’s semiconductor plants

Process Conditions: - 600 psi/41 bar, 510˚C/950˚F with extremely abrasive particles

Success Story: Dow purchased over a thousand valves from GOSCO because they outlasted all the competition

Size & Location: 50+, 1/2” to 4” valves installed in the U.K.

Description: Our valves are used to control the steam entering in to the stills

Process Conditions: GOSCO valves ensured the steam is at the ideal pressure and temperature for the distillation process

Success Story: Our valves are utilized for their reliability, performance, and equal percentage control range with the ability to fully isolate the steam when the valves are in the closed position

Size & Location: 150+, 2” to 6” valve in the Alberta Oil Sands

Description: Used on raw syngas, asphaltene, steam, methane, nitrogen

Process Conditions: Used in extremely abrasive and corrosive conditions at 364ºC/687ºF
241 bar/3500 psi

Success Story: Although all of our valves had a higher initial cost, the cost of ownership in 2-3 years was less than half for every valve we installed

M-Class

NPS ½ to NPS 16 (DN 15 to DN 400)

-253ºC / -423ºF to 875ºC / 1607ºF/

Up to and above Class 4500

Most extreme applications

Different Price Options (“Valves as a Service”)

M-Class

The Most Extreme Applications Have Met Their Match

M-CLASS

CUSTOM METAL SEATED