ITEM	PART NO	QTY	DESCRIPTION	DWG NO/SPEC

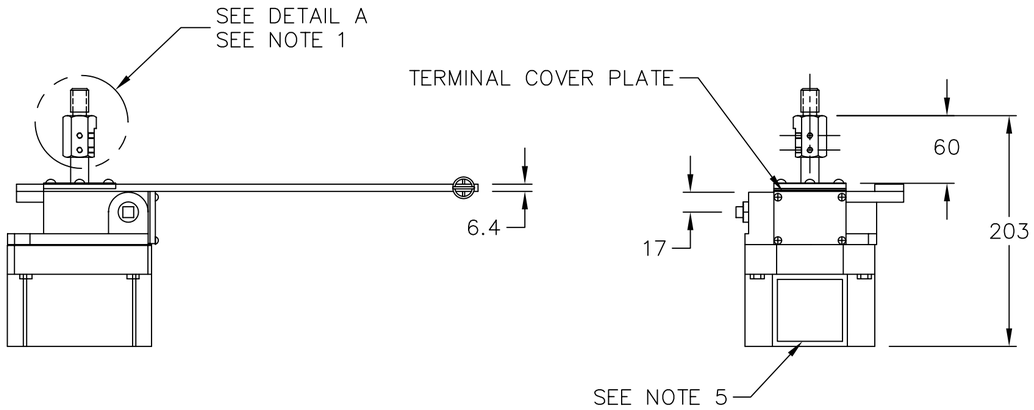

NOTES:

1. SPEED SENSOR TO BE DRIVEN BY CONVEYOR TAIL PULLEY. SPEED SENSOR MAX. INPUT RPM = 200, MIN. INPUT RPM = 20.
2. STUB SHAFT PROVIDED FOR INSTALLATION INTO PULLEY SHAFT DRILLED AND TAPPED 5/8"–11 x 38mm DP. (REFER TO INSTRUCTION MANUAL)
3. ALL HARDWARE USED TO MOUNT RESTRAINT ARM TO SPEED SENSOR SUPPLIED BY THERMO RAMSEY.
4. SPEED SENSOR MUST NOT BE MOUNTED RIGID. USE RESTRAINT ARM AND RETAINING SPRING TO KEEP SPEED SENSOR FROM ROTATING. MECHANICAL STOP AND SPRING MOUNT BY OTHERS.
5. ALL WIRING BY OTHERS IN ACCORDANCE WITH SYSTEM FIELD WIRING DIAGRAM.
6. FACTORY MUTUAL (FM) APPROVED FOR:
   CLASS I, DIV. 2, GROUP D
   CLASS II & III, DIV. 2, GROUPS F & G
   CLASS II & III, DIV. 1, GROUPS E, F & G.

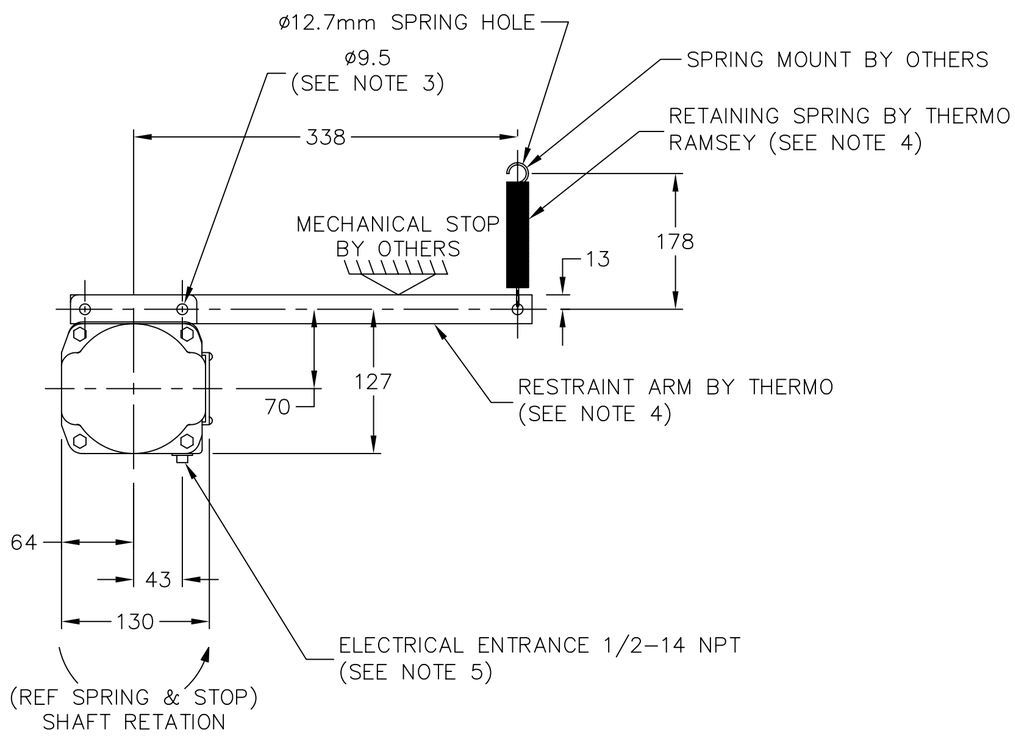

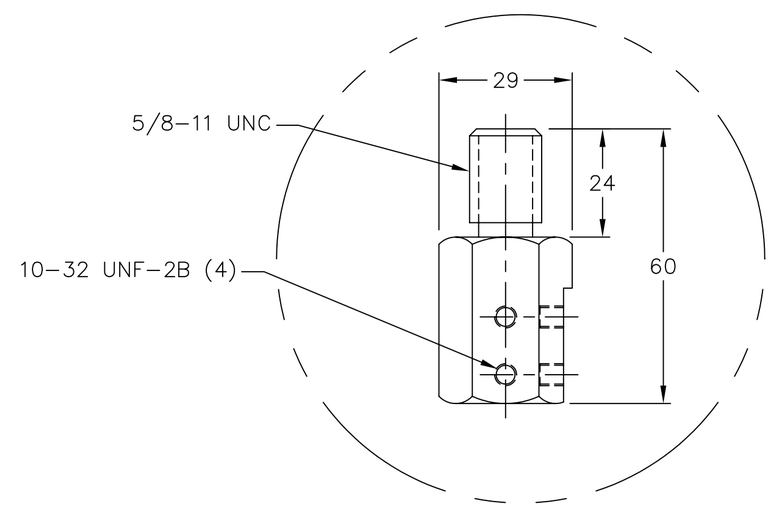

DETAIL A
SCALE 4X

CADD DATABASE: AUTOCAD

FOR APPROVAL ONLY
THERMORAMSEY

REV	ECO NO	MICRO	DESCRIPTION	DATE	BY	APPD
A			RELEASED	9-30-03	HJF	SJL

DO NOT SCALE DWG REMOVE ALL BURRS AND UNNECESSARY SHARP EDGES	SCALE 1/4		
	JOB NO 61894		
TOLERANCE UNLESS SPECIFIED .X ± .06 .XX ± .03 .XXX ± .01 FRACT. ± 1/16 ANGLES ± 1/2°	ENG SJL	DATE 9-29-03	
	DWN HJF	DATE 9-29-03	
	CHK SJL	DATE 9-30-03	
NEXT ASS'Y			
CUST ORDER NO 2003-239E			
CUSTOMER LOCATION	LINK INDUSTRIAL TECHNOLOGIES EDMONTON, AB		
USER LOCATION	SYNCRUDE CANADA LIMITED MILDRED LAKE SITE FORT MCMURRAY, AB		

This document is confidential and is the property of Thermo Electron ("Thermo"). It may not be copied or reproduced in any way without the expressed written consent of Thermo. This document also is an unpublished work of Thermo. Thermo intends to and is maintaining the work as confidential information. Thermo also may seek to protect this work as an unpublished copyright. In the event of either inadvertent or deliberate publication, Thermo intends to enforce it's rights to this work under the copyright laws as a published work. Those having access to this work may not copy, use or disclose the information in this work unless expressly authorized by Thermo.

Thermo
ELECTRON CORPORATION

OUTLINE AND INSTALLATION DIAGRAM
SPEED SENSOR, MODEL 61-12C
FACTORY MUTAL (FM) APPROVED

PART NO	DRAWING NUMBER	REV
	C15204A-B005	A

Derived From C07046A-B019

©2003, by Thermo Electron